Dokumen Meja Terkawal

HARGA DOKUMEN
RM 500.00

SULIT DAN PERSENDIRIAN

MAJLIS DAERAH KUALA LANGAT

DOKUMEN TENDER

UNTUK

CADANGAN MENAIKTARAF RUANG PETAK PENIAGA SERTA KERJA-KERJA BERKAITAN DI BANGUNAN PASAR AWAM BANTING, KUALA LANGAT.

NO. TENDER : MDKL/JK/T:05/2019

i.	Pendaftaran	: GRED	: G4
		KATEGORI	: B
		PENGKHUSUSAN	: B04
		PKK dan UPEN yang masih SAH	
ii.	Tarikh Iklan	: 04.09.2019	
iii.	Tarikh Jual Dokumen	: 04.09.2019	
iv.	Tarikh Tutup Tender	: 26.09.2019	
v.	Tempoh Siap Kerja	: 12 MINGGU	
vi.	Denda Lewat Siap	: RM 100.00/Hari	
v.	Penyata Bank	: MEI 2019 , JUN 2019 DAN JULAI 2019	

Nama Kontraktor : _____
Alamat : _____
_____
_____
_____

No. Resit : _____

MAJLIS DAERAH KUALA LANGAT
PERSIARAN MAJLIS, JALAN SULTAN ALAM SHAH,
42700 BANTING, SELANGOR DARUL EHSAN

Dokumen Meja Terkawal

SENARAI SEMAKAN
(KERJA)

Sila tandakan [/] Bagi Dokumen-dokumen Yang Disertakan.

Bil.	Perkara/Dokumen	Untuk Di tanda Oleh Syarikat	Untuk Di tanda Oleh Jawatankuasa Pembuka Tender
1	Salinan Perakuan Pendaftaran Kontraktor dan Salinan Sijil Perolehan Kerja Kerajaan (SPKK) dan CIDB (Kerja)		
2	Salinan Sijil Taraf Bumiputera Dari Pusat Khidmat Kontraktor (Kerja)		
3	Salinan Sijil Pendaftaran Dari CIDB		
4	Borang Tender Telah Diisi Dengan Lengkap (termasuk nilai tawaran dan tempoh siap) dan Ditandatangani		
5	Borang Maklumat Tender		
6	Pendaftaran dengan Unit Perancang Ekonomi Negeri UPEN		
7	Senarai Kakitangan Teknikal (jika berkaitan)		
8	Salinan Penyata Bulanan Akaun Bank bagi Tiga (3) Bulan Terakhir (bagi tender melebihi RM200,000 wajib disertakan)		
9	Borang Sebutharga/Tender telah ditandatangani		
10	Pematuhan Kepada Spesifikasi		
11	Surat Akuan Pembida (Lampiran A1) Telah Diisi Dengan Lengkap Dan Ditandatangani		
12	Lain-lain Sekiranya Ada		

PENGESAHAN OLEH SYARIKAT

Dengan ini saya mengesahkan bahawa saya telah membaca dan memahami semua syarat dan terma yang dinyatakan di dalam dokumen sebutharga. Semua maklumat yang dikemukakan adalah benar

TANDATANGAN:
COP SYARIKAT:
NAMA:
JAWATAN:
TARIKH:

UNTUK KEGUNAAN JABATAN

Jawatankuasa Pembuka Tender mengesahkan penerimaan dokumen bertanda kecuali bagi perkara bil. ..... (jika ada)

TANDATANGAN:
NAMA:
JAWATAN:
TARIKH:

TANDATANGAN:
NAMA:
JAWATAN:
TARIKH:

Dokumen Meja Terkawal

MAJLIS DAERAH KUALA LANGAT

NO. TENDER : MDKL/JK/T:05/2019

CADANGAN MENAIKTARAF RUANG PETAK PENIAGA SERTA KERJA-KERJA BERKAITAN DI BANGUNAN PASAR AWAM BANTING, KUALA LANGAT.

Bil	ISI KANDUNGAN	M/S
	SENARAI SEMAK	1
1.	NOTIS TENDER	1/1/1
2.	SURAT AKUAN PEMBIDA	2/1/3 - 2/3/3
3.	ARAHAN KEPADA PETENDER	3/1/4 - 3/4/4
4.	SYARAT-SYARAT TENDER	4/1/9 - 4/9/9
5.	SYARAT-SYARAT KONTRAK	1 - 62
6.	ADDENDA KEPADA SYARAT-SYARAT KONTRAK	5/1/11 - 5/11/11
7.	PERUNTUKAN KHAS KEPADA SYARAT-SYARAT	6/1/2 - 6/2/2
8.	BORANG TENDER	1 - 11
9.	BORANG MAKLUMAT PENYEBUT HARGA	
9.1	BORANG A : SURAT PERAKUAN KEBENARAN MAKLUMAT DAN KEESAHAN DOKUMEN YANG DIKEMUKAKAN OLEH PETENDER	A/1-A/2
9.2	BORANG B : MAKLUMAT AM LATAR BELAKANG PETENDER	B/1-B/2
9.3.	BORANG C : DATA-DATA KEWANGAN	C/1
9.4.	BORANG CA : LAPORAN BANK/INSTITUSI KEWANGAN MENGENAI KEDUDUKAN KEWANGAN PETENDER	CA1
9.5.	BORANG D : REKOD PENGALAMAN PEMBEKAL	D/1
9.6.	BORANG E : KAKITANGAN TEKNIKAL	E/1
9.7.	BORANG F : KEEMPUNYAAN LOJI DAN PERALATAN PEMBINAAN	F/1
9.8.	BORANG G : SENARAI KERJA PEMBEKAL SEMASA	G/1
9.9	BORANG GA : LAPORAN PENYELIA PROJEK ATAS PRESTASI KERJA (BUKAN PROJEK JABATAN) SEMASA PETENDER	GA/1
10.	SENARAI KUANTITI	MS 1/10 - MS 10/10
11.	LAMPIRAN	

Dokumen Meja Terkawal

NOTIS TENDER

Dokumen Meja Terkawal

NOTIS SEBUTHARGA

CADANGAN MENAIKTARAF RUANG PETAK PENIAGA SERTA KERJA-KERJA BERKAITAN DI BANGUNAN PASAR AWAM BANTING, KUALA LANGAT.

1. Tawaran adalah di pelawa kepada Kontraktor **BUMIPUTERA** yang mempunyai Sijil Perolehan Kerja Kerajaan berdaftar dengan Lembaga Pembangunan Industri Pembinaan Malaysia (CIDB) di dalam

GRED G4
Kategori B
Pengkhususan B04
DAN
Unit Perancang Ekonomi Negeri (UPEN)

No Tawaran: **MDKL/JK/T:05/2019**

2. Dokumen meja tawaran dipamerkan mulai **04 SEPTEMBER 2019** hingga **26 SEPTEMBER 2019** di laman sesawang **http://tender.selangor.gov.my** di setiap bahagian iklan dipamerkan dan Unit Perolehan dan Aset , Majlis Daerah Kuala Langat, Tingkat 1, Persiaran Majlis, Jalan Sultan Alam Shah, 42700 Banting, Selangor semasa waktu pejabat seperti berikut:.

Isnin hingga Jumaat	8.30 pagi	-12.30 tgh hari
	2.30 petang	- 4.30 petang

3. Penjualan Dokumen Tender adalah **secara ONLINE sahaja**. Dokumen Tender boleh dimuat turun melalui laman sesawang **http://tender.selangor.gov.my** dan **WAJIB dibukukan / didokumentasikan.**

4. Tawaran ini akan ditutup pada **26 SEPTEMBER 2019 (KHAMIS)**. Dokumen Tender tidak akan dikeluarkan selepas dari waktu tersebut. Sebarang pertanyaan sila hubungi **UNIT PEROLEHAN & ASET di Talian 03-31872825 sambungan 118,119 dan 167.**

5. Penghantaran Dokumen Tender perlu disertakan bersama **RESIT PEMBAYARAN** sebagai bukti pembelian.

6. Ditegaskan bahawa dokumen tawaran yang tidak lengkap akan ditolak oleh pihak Majlis.

   Tawaran yang telah lengkap di isi hendaklah dimasukkan ke dalam Peti Tawaran di :

   Tingkat 1,
   Jabatan Khidmat Pengurusan
   Majlis Daerah Kuala Langat
   Persiaran Majlis, Jalan Sultan Alam Shah,
   42700 Banting, Selangor Darul Ehsan.

7. Borang tersebut hendaklah sampai tidak lewat dari jam 12.00 tengahari pada tarikh tawaran di tutup. Tawaran yang lewat diterima dari masa yang ditetapkan tidak akan dilayan.

(MUHAMMAD ASYRAF BIN MOHAMMAD JASNI)
Juruukur Bahan
Unit Perolehan dan Ukur Bahan
b.p Yang Dipertua
Majlis Daerah Kuala Langat

Dokumen Meja Terkawal

SURAT AKUAN PEMBIDA

Dokumen Meja Terkawal

LampiranA1
(SAP bertarikh 1 April 2010)

SURAT AKUAN PEMBIDA

Bagi

CADANGAN MENAIKTARAF RUANG PETAK PENIAGA SERTA KERJA-KERJA BERKAITAN DI BANGUNAN PASAR AWAM BANTING, KUALA LANGAT.

(MDKL/JK/T:05/2019)

Saya, ... nombor K.P. ..... yang mewakili ..... nombor Pendaftaran ..... dengan ini mengisytiharkan bahawa saya atau mana-mana individu yang mewakili syarikat ini tidak akan menawar atau memberi rasuah kepada mana-mana individu dalam **Majlis Daerah Kuala Langat (MDKL)** atau mana-mana individu lain, sebagai sogokan untuk di pilih dalam tender/ ~~sebutharga~~ * seperti di atas. Bersama - sama ini dilampirkan Surat Pewakilan Kuasa bagi saya mewakili syarikat seperti tercatat di atas untuk membuat pengisytiharan ini.

2. Sekiranya saya atau mana-mana individu yang mewakili syarikat ini didapati bersalah menawarkan atau member rasuah kepada mana-mana individu dalam **Majlis Majlis Daerah Kuala Langat (MDKL)** atau mana-mana individu lain sebagai sogokan untuk dipilih dalam tender/ ~~sebutharga~~ * seperti diatas, maka saya wakil syarikat bersetuju tindakan-tindakan berikut diambil :-

2.1 Penarikan balik tawaran kontrak bagi tender/ ~~sebutharga~~ * diatas; atau
2.2 Penamatan kontrak bagi tender/ ~~sebutharga~~ * diatas; dan
2.3 Lain-lain tindakan tatatertib mengikut peraturan perolehan kerajaan.

3. Sekiranya terdapat mana-mana individu cuba meminta rasuah daripada saya atau mana-mana individu yang berkaitan dengan syarikat ini sebagai sogokan untuk dipilih dalam tender/ ~~sebutharga~~ * diatas, maka saya berjanji akan dengan segera melaporkan perbuatan tersebut kepada pejabat Suruhanjaya Rasuah Malaysia (SPRM) atau balai polis yang berhampiran.

Yang Benar,

.....
(Nama Dan No.KP)

Cop Syarikat :

Catatan : * Potong mana yang tidak berkaitan

Dokumen Meja Terkawal

LAMPIRAN A1

Kementerian Kewangan Malaysia

KLAUSA PENCEGAHAN RASUAH DALAM DOKUMEN PEROLEHAN KERAJAAN

"Termination on Corruption, Unlawful of Illegal Activities"

a) Without prejudice to any other rights of the Government, if the (Company/ Firm), its personnel, servants or employee is convicted by a court of law for corruption or unlawful or illegal activities in relation to this (Agreement/ Contract) at any time, by giving immediate written notice to that effect to the (Company/ Firm)

b) Upon such termination, the Government shall be entitled to all losses, costs, damages and expenses) including any incidental costs and expenses) incurred by the Government arising from such termination.

c) For the avoidance of doubt, the Parties hereby agree that the (Company/ Firm) shall not be entitle to any form of losses including loss of profit, damages, claims or whatsoever upon termination of this (Agreement/ Contract)

SURAT AKUAN PEMBIDA BERJAYA

CADANGAN MENAIKTARAF RUANG PETAK PENIAGA SERTA KERJA-KERJA BERKAITAN DI BANGUNAN PASAR AWAM BANTING, KUALA LANGAT.

No. Kontrak: MDKL/JK/T:05/2019

Saya ..... nombor K.P ..... yang mewakili.....(nama syarikat).....nombor pendaftaran (*MOF/CIDB/SSM) ..... dengan ini mengisytiharkan bahawa saya atau mana-mana individu yang mewakili syarikat ini tidak akan menawar atau memberi rasuah kepada mana-mana individu dalam **Majlis Daerah Kuala Langat** atau mana-mana individu lain, sebagai ganjaran untuk dipilih dalam *~~sebut harga~~ /tender seperti di atas. Bersama ini dilampirkan Surat Perwakilan Kuasa bagi saya mewakili syarikat seperti tercatat di atas untuk membuat pengisytiharaan ini.

2. Sekiranya saya atau mana-mana individu yang mewakili syarikat ini didapati bersalah menawar atau memberi rasuah kepada mana-mana individu dalam **Majlis Daerah Kuala Langat** atau mana-mana individu lain sebagai ganjaran mendapatkan *~~sebut harga~~/tender seperti diatas, maka saya sebagai wakil syarikat bersetuju tindakan-tindakan berikut diambil;

2.1 penarikan balik tawaran kontrak bagi *~~sebut harga~~/tender di atas; atau
2.2 penamatan kontrak bagi *~~sebut harga~~/tender di atas; dan
2.3 lain-lain tindakan mengikut peraturan perolehan Kerajaan yang berkuat kuasa.

3. Sekiranya terdapat mana-mana individu cuba meminta rasuah daripada saya atau mana-mana individu yang berkaitan dengan syarikat ini sebagai ganjaran mendapatkan *~~sebut harga~~/ tender seperti di atas, maka saya berjanji akan dengan segera melaporkan perbuatan tersebut kepada pejabat Suruhanjaya Pencegahan Rasuah Malaysia (SPRM) atau balai polis yang berhampiran.

Yang Benar,

.....
(Nama dan No. KP)

Cop Syarikat :

Catatan:
1. *Potong mana yang tidak berkenaan
2. Surat akuan ini hendaklah dikemukakan bersama Surat Perwakilan Kuasa

Dokumen Meja Terkawal

ARAHAN KEPADA PENENDER

ARAHAN KEPADA PETENDER

1. HAK MAJLIS UNTUK MENERIMA/MENOLAK TENDER

Majlis Daerah Kuala Langat adalah tidak terikat untuk menerima tender yang terendah atau mana-mana tender atau memberi apa-apa sebab di atas penolakan sesuatu tender. Keputusan Jawatankuasa Tender adalah muktamad.

2. CARA-CARA MELENGKAPKAN DOKUMEN TENDER

2.1 Penyediaan Tender

Kontraktor adalah dikehendaki mengisi dengan dakwat segala maklumat berikut dengan sepenuhnya:-

a) Harga dan tandatangan Kontraktor di Ringkasan Tender,

b) Harga, Tempoh dan tandatangan dalam Borang Tender,

c) Senarai Kerja Dalam Tangan,

d) Borang Akuan Pembida Diisi dan ditandatangani,

e) Butir - butir Spesifikasi

f) Jadual Kadar Harga (jika ada)

Jika berlaku kesilapan dalam mengisi maklumat-maklumat di atas Kontraktor hendaklah menandatangani ringkas semua pembetulan.

2.2 Kontraktor dikehendaki mengemukakan dokumen-dokumen berikut bersama-sama Tendernya:

a) Salinan Penyata Bulanan Akuan Bank mengenai Wang Dalam Tangan Petender bagi tiga (3) bulan terakhir sebelum tarikh tutup Tender
atau

b) Laporan bank/Institusi kewangan mengenai kedudukan kewangan Petender

atas format seperti BORANG CA dalam satu sampul berlakri (jika ada)

2.3 Penyerahan Dokumen Tender

a) Dokumen Tender yang telah diisi dengan lengkap hendaklah dimasukkan ke dalam surat berlakri yang dicatatkan dengan bilangan Sebutharga serta tajuk Tender dan hendaklah dimasukkan ke dalam peti Tender pada masa dan tempat yang ditetapkan dalam Notis Tender.

b) Jika dokumen Tender tidak diserahkan dengan tangan, Petender hendaklah menghantar dokumen tersebut dengan pos laju supaya tiba pada atau masa dan ditempat yang ditetapkan.

c) Tender yang diserahkan selepas masa yang ditetapkan, berbangkit dan sebarang sebab, tidak akan dipertimbangkan.

2.4 Penjelasan Lanjut

Sekiranya terdapat maklumat dalam Dokumen Tender yang tidak jelas atau bercanggah, Kontraktor boleh menghubungi pejabat ini untuk penjelasan lanjut di talian 03-3187 2825 Jabatan Khidmat Pengurusan (Unit Perolehan & Aset) Sambungan 118,119 dan 167.

3. PENJELASAN BERKAITAN SPESIFIKASI/TEKNIKAL

Penyebutharga hendaklah meminta penjelasan berkaitan spesifikasi/ teknikal yang tidak jelas atau bercanggah di talian 03-3187 2825 Jabatan Kejuruteraan Sambungan 168.

4. TAWARAN DITOLAK

Mana-mana tawaran yang tidak mematuhi arahan atau tidak lengkap boleh ditolak oleh pihak Majlis.

5. TAWARAN

Pelawaan tawaran ini adalah untuk kerja **CADANGAN MENAIKTARAF RUANG PETAK PENIAGA SERTA KERJA-KERJA BERKAITAN DI BANGUNAN PASAR AWAM BANTING, KUALA LANGAT.**

6. TUNTUTAN

Pihak Majlis tidak bertanggungjawab terhadap sebarang tuntutan Petender yang berpunca dari kegagalan petender mematuhi sebarang arahan yang diberikan.

7. MAKSUD PERKATAAN

Jika terdapat perkataan-perkataan yang kurang jelas maksudnya di dalam mana-mana bahagian dokumen ini, petender hendaklah menyertakan surat bagi menyatakan maksud perkataan tersebut seperti yang difahami semasa mengemukakan tender.

8. PINDAAN KE ATAS DOKUMEN

Petender tidak dibenarkan membatal, menambah dan membuat sebarang pindaan ke atas dokumen tawaran ini tanpa kelulusan bertulis daripada pihak pengurusan MDKL kecuali terdapat arahan atau syarat yang diperlukan berbuat demikian.

9. BORANG TAWARAN

Tawaran ini hendaklah dibuat di atas borang tawaran yang disertakan bersama-sama di dalam dokumen ini dengan mengisi harga tawaran, jumlah kakitangan dan maklumat-maklumat lain yang diperlukan. Borang tersebut hendaklah ditandatangani oleh seorang pegawai yang diakui oleh syarikat atau seorang yang boleh memegang jawatan di dalam pengurusan syarikat dan juga ditandatangani oleh seorang saksi.

10. PERBELANJAAN

Pihak majlis tidak akan bertanggungjawab di atas segala perbelanjaan atau kerugian yang dialami oleh petender bersangkutan dengan lawatan tapak atau sebarang perbelanjaan yang berkaitan semasa menyediakan tawaran ini.

11. HARGA TAWARAN

Harga yang diberikan hendaklah meliputi semua perkara membekal peralatan keperluan, kos pengangkutan, upah buruh, pakaian seragam,cukai keuntungan, elaun , cukai perkhidmatan , kos overhead dan lain - lain yang berkaitan dengannya. Kadar-kadar harga adalah tetap untuk sepanjang tempoh kontrak.

12. TEMPOH SAH LAKU

Tender ini sah selama sembilan puluh (90) hari dari tarikh tutup tender. Petender tidak boleh menarik balik tendernya sebelum tamat tempoh sah tender. Tindakan tatatertib akan diambil sekiranya penyebut harga menarik balik tender.

13. KOS PERJANJIAN

Petender yang berjaya di dalam tawaran akan dikehendaki menyediakan dan menandatangani satu perjanjian kontrak dengan pihak Majlis di mana segala kos berkaitan ditanggung oleh petender.

14. DENDA

Sekiranya Petender gagal melaksanakan Perkhidmatan dalam tempoh yang ditetapkan atau dalam tempoh lanjutan yang dipersetujui bersama di antara pihak Majlis dan Petender, maka Petender dikehendaki membayar denda dalam tempoh tiga puluh (30) hari setelah menerima notis denda daripada Majlis. **Kadar denda ini ialah RM100/Sehari.**

15. TEMPOH SIAP KERJA

Tempoh siap kerja untuk kerja ini adalah **12 Minggu**

16. BAYARAN DOKUMEN TENDER

Dokumen Tender ini dijual dengan harga **RM ...500.00.. (Ringgit Malaysia: Lima Ratus Ringgit sahaja).**

17. PEMBELIAN TENDER

Setiap **SATU Syarikat** hanya dibenarkan membeli **SATU Dokumen** sahaja.

18. PERBUATAN RASUAH

Sebarang tawaran yang berbentuk rasuah atau lain-lain dorongan yang boleh mempengaruhi kedudukan penyebutharga akan menyebabkan Tender tersebut ditolak serta merta

(Sila Rujuk Arahan Tambahan Seperti di lampiran A dan Lampiran A1)

Dokumen Meja Terkawal

SYARAT-SYARAT TENDER

Dokumen Meja Terkawal

SYARAT-SYARAT TENDER UNTUK KERJA

1. PEMERIKSAAN TAPAK BINA

Kontraktor disifatkan telah memeriksa dan meneliti Tapakbina dan sekitarnya, bentuk dan jenis tapakbina, takat dan jenis kerja, bahan dan barang yang perlu bagi menyiapkan kerja, cara-cara perhubungan dan laluan barang yang perlu bagi menyiapkan kerja, cara-cara perhubungan dan laluan masuk ke tapakbina dan hendaklah mendapatkan sendiri segala maklumat yang perlu tentang risiko luar jangkaan dan segala hal keadaan yang mempengaruhi dan menjejaskan sebutharganya. Sebarang tuntutan yang timbul akibat daripada kegagalan Kontraktor mematuhi kehendak ini tidak akan dipertimbangkan.

2. BON PELAKSANAAN/WANG JAMINAN PELAKSANAAN

2.1 Kontraktor hendaklah sebelum memulakan sesuatu kerja, mendepositkan kepada Majlis satu Bon Pelaksaan berupa :-

i) Jaminan Bank/Bank Islam/Bank Pembangunan Malaysia Berhad (Bank Pembangunan); atau

ii) Jaminan Syarikat Kewangan; atau

iii) Jaminan Insurans/Takaful.

2.2 Jika kontraktor memilih Wang Jaminan Pelaksanaan sebagai potongan maka sebanyak sepuluh (10%) peratus daripada setiap bayaran interim sehingga mencapai jumlah lima (5%) peratus jumlah kontrak akan dikenakan. (Wang Jaminan Pelaksanaan hanya terpakai untuk kontrak perolehan kerja).

2.3 Sekiranya kontraktor gagal melaksanakan kerja mengikut ketetapan kontrak ini pihak Majlis berhak menggunakan dan membuat bayaran atau potongan daripada Bon Pelaksanaan atau Wang Jaminan Pelaksanaan ini mengikut jumlah kerugian.

2.4 Bon Pelaksanaan atau Wang Jaminan Pelaksanaan akan dilepaskan atau dipulangkan apabila kontraktor siap membaiki

kecacatan atau kerosakan dan setelah tamat tempoh liabiliti kecacatan.

3. PERSETUJUAN

Majlis tidak terikat untuk Setuju Terima Tender yang terendah atau mana-mana tender.

4. INSURANS

4.1 Kontraktor hendaklah atas nama bersama Majlis dan Kontraktor mengambil Insuran Liability awam dan Insuran Kerja (sekiranya dinyatakan di dalam Butir-Butir ringkasan Tender) bagi tempoh perlaksanaan Kerja ini.

4.2 **Kontraktor hendaklah mengemukakan kepada Pegawai yang diberikuasa semua polisi insurans yang tersebut seperti di atas sebelum memulakan kerja.** Bagaimanapun untuk tujuan memulakan kerja sahaja Nota-Nota Perlindungan dan resit-resit bayaran premium adalah mencukupi. Sekiranya Kontraktor gagal mengemukakan semua polisi insurans selepas tempoh sah nota-nota perlindungan, tanpa sebarang sebab yang munasabah, Pegawai yang diberikuasa berhak mengambil tindakan.

4.3 Kontraktor digalakkan mengambil perlindungan insurans bagi Perkara di atas daripada :-

PNSB INSURANCEBROKERS SDN BHD
No. Telefon : 03-5519 3271
No. Faksimili : 03-5519 3280
Laman Web : www.pnsbbroker.com.my

5. PERATURAN PELAKSANAAN KERJA

5.1 Kerja-kerja Elektrik dilaksanakan hendaklah mematuhi spesifikasi, pelan-pelan butir-butir kerja dalam Ringkasan Tender dan syarat-syarat yang dinyatakan dalam Dokumen Tender ini dan arahan Pegawai yang diberikuasa atau Wakilnya.

Dokumen Meja Terkawal

5.2 Kerja-kerja elektrik yang dilaksanakan disampaing mematuhi kehendak di perenggan 5.1 diatas, hendaklah juga mematuhi semua peraturan dan pekeliling, undang-undang dan undang-undang kecil yang diluluskan oleh :

i) Suruhanjaya Tenaga

ii) Jabatan Keselamatan Pekerjaan dan Kesihatan

iii) Pemegang Lesen dan Pihak Bekuasa Bekalan Elektrik

iv) Jabatan Bomba dan Penyelamat

v) Pihak Berkuasa Tempatan

6. KEGAGALAN KONTRAKTOR MEMULAKAN KERJA

Sekiranya Kontraktor gagal memulakan kerja selepas **tujuh (7)** hari dari tarikh akhir tempoh mula kerja yang dinyatakan di dalam sebut harga maka tindakan penamatan akan diambil terhada Kontraktor.

7. SUB SEWA DAN MENYERAHKAN HAK KERJA

Kontraktor tidak dibenarkan mengsub-sewakan kerja kepada kontraktor-kontraktor yang lain. Kontraktor tidak boleh menyerahkan hak apa-apa faedah di bawah Tender ini tanpa terlebih dahulu mendapatkan persetujuan bertulis daripada Pegawai yang diberikuasa.

8. PENOLAKAN BAHAN, BARANG DAN KERJA OLEH PEGAWAI INDEN

8.1 Pegawai yang diberikuasa atau wakilnya berhak menolak bahan, barang dan hasil kerja dari jenis piawaian yang tidak menepati seperti diperihalkan dalam spesifikasi. Kontraktor hendaklah apabila diminta oleh pegawai yang diberikuasa, memberi kepadanya baucar-baucar dan/atau perakuan ujian pengilang untuk membuktikan bahawa bahan-bahan dan barang-barang itu mematuhi spesifikasi. Bahan, barang dan kerja-kerja yang ditolak hendaklah diganti dan sebarang kos tambahan yang terlibat hendaklah ditanggung oleh kontraktor sendiri.

8.2 Kontraktor hendaklah sepenuhnya atas perbelanjaan sendiri menyediakan sampel bahan dan barang-barang untuk ujian.

8.3 Tiada penggantian untuk peralatan, bahan dan cara penghantaran kerja yang telah ditentukan di dalam spesifikasi atau ditawarkan dan telah diterima, dibenarkan kecuali mendapat persetujuan daripada Pegawai yang diberikuasa secara bertulis.

9. RINGKASAN TENDER

9.1 Ringkasan Tender hendaklah menjadi sebahagian daripada Borang Tender ini dan hendaklah menjadi asas Jumlah Harga Tender.

9.2 Harga-harga dalam Ringkasan Tender hendaklah mengambil kira semula kos termasuk kos pengangkutan, cukai, duti, bayaran lain-lain caj yang perlu dan berkaitan bagi penyiapan kerja dengan sempurna.

9.3 Tiada sebarang tuntutan akan dilayan bagi penyelarasan harga akibat daripada perubahan harga kos buruh, bahan-bahan dan semua duti dan cukai kerajaan, sama ada tempoh sah Tender atau dalam tempoh kerja.

9.4 Harga-harga dalam Ringkasan Tender yang dikemukakan oleh kontraktor hendaklah tertakluk kepada persetujuan sebelumnya daripada Pegawai Tender tentang kemunasabahannya. Persetujuan sebelumnya itu dan apa-apa pelarasan kemudiannya kepada harga-harga dalam Ringkasan Tender Kerja dikeluarkan.

9.5 Apa-apa pelarasan dalam Ringkasan Tender menurut Perkara di atas dan apa-apa kesilapan hisab dalam Ringkasan Tender hendaklah diselaraskan dan dibetulkan sebelum Tender Kerja dikeluarkan. Jumlah harga yang diselaraskan hendaklah sama dengan jumlah harga pukal dalam Borang Tender. Jumlah harga pukal dalam Borang Tender hendaklah tetap tidak berubah.

9.6 Sekiranya Tender berasaskan Senarai Kuantiti Sementara, pengukuran semula hendaklah dibuat dan harga tender diselaraskan.

Dokumen Meja Terkawal

10. PERCANGGAHAN DAN KECUKUPAN DOKUMEN TENDER

10.1 Dokumen Tender adalah dikira jelas di antara satu sama lain. Kontraktor hendaklah mengadakan segala yang perlu untuk melaksanakan kerja dengan sewajarnya sehingga siap mengikut tujuan dan maksud sebenar. Dokumen Tender pada keseluruhannya sama ada tidak tujuan dan maksud itu ada ditunjuk atau diperihalkan secara khusus, dengan syarat bahawa tujuan, maksud itu hendaklah difahamkan dengan munasabahnya dari Dokumen Tender itu.

10.2 Jika kontraktor mendapati terdapat apa-apa percanggahan di dalam Dokumen Tender dia hendaklah merujuk kepada Pegawai yang diberikuasa untuk mendapatkan kepastian.

11. KEGAGALAN KONTRAKTOR MENYIAPKAN KERJA DAN PENAMATAN PELANTIKAN KONTRAKTOR

11.1 Pegawai yang diberikuasa berhak membatalkan tender sekiranya kontraktor berada dalam keadaan berikut dan setelah menerima surat amaran daripada Pegawai yang diberikuasa :-

a) Sekiranya kontraktor masih gagal menyiapkan kerja di dalam tempoh masa yang telah ditetapkan;

b) Kemajuan kerja terlalu lembab tanpa apa-apa sebab munasabah;

c) Penggantungan pelaksanaan seluruh atau sebahagian kerja, tanpa apa-apa alasan munasabah;

d) Tidak mematuhi arahan Pegawai yang diberikuasa tanpa apa-apa alasan munasabah; atau

e) Apabila kontraktor diisytiharkan bankrap oleh pihak yang sah.

11.2 Sekiranya pelantikan kontraktor ditamatkan, pengesyoran tindakan tatatertib oleh Lembaga Pembangunan Industri Pembinaan Malaysia (CIDB) akan diambil terhadap Kontraktor.

12. BAYARAN KEMAJUAN

Pegawai yang diberikuasa dibenarkan membuat bayaran interim sehingga kerja-kerja siap dilaksanakan. Namun bagi kerja-kerja dengan tempoh siap yang singkat adalah tidak digalakkan.

13. KERJA PERUBAHAN (VO)

13.1 Pegawai yang diberikuasa boleh menurut budi bicaranya mengeluarkan arahan-arahan yang berkehendakkan sesuatu perubahan kerja secara bertulis. Tiada apa-apa perubahan yang dikeluarkan oleh Pegawai yang diberikuasa atau disahkan kemudian oleh Pegawi yang diberikuasa boleh membatalkan Tender ini.

13.2 Semua kerja perubahan dan/atau tambahan yang diluluskan oleh Pegawai yang diberikuasa akan diuukur dan dinilai dengan menggunakan kadar harga yang ada dalam Senarai Kuantiti/Ringkasan Tender. Jika tidak terdapat sebarang kadar harga yang bersesuaian, kadar harga yang dipersetujui oleh Pegawai yang diberikuasa dan kontraktor hendaklah digunakan.

13.3 Bagi perubahan kerja yang melibatkan kuantiti dan kos tambahan hendaklah tidak melebihi **dua puluh** (20%) peratus dari nilai harga kontrak asal.

14. KELAMBATAN DAN LANJUATAN MASA

14.1 Apabila didapati dengan menasabahnya bahawa kemajuan kerja terlambat, kontraktor hendaklah dengan serta-merta memberi notis bertulis menyatakan sebab-sebab kelambatan kepada Pegawai Penguasa dalam tempoh kontrak.

14.2 Pelanjutan masa bagi kontrak kerja bernilai melebihi RM20,000 hingga Rm500,000 dibenarkan **TERTAKLUK** kepada kelulusan Jawatankuasa Tender terlebih dahulu.

Dokumen Meja Terkawal

15. TEMPOH TANGGUNGAN KECACATAN (DLP)

15.1 Tempoh Tanggungan Kecacatan bagi Tender hendaklah sekurang-sekurangnya **enam** (6) bulan dari tarikh kerja diperakukan siap.

15.2 Kontraktor dipertanggungjawabkan untuk membaiki kecacatan, ketidaksempurnaan, kecacatan atau apa-apa jua kerosakan lain yang mungkin kelihatan yang disebabkan oleh bahan atau barang atau mutu hasil kerja yang tidak menepati sebut harga ini apabila diarahkan oleh Pegawai yang diberikuasa dan dalam masa yang berpatutan. Kontraktor hendaklah membaiki kecacatan, ketidaksempurnaan, kekecutan atau apa-apa jua kerosakan lain atas kos kontraktor sendiri.

15.3 Sekiranya Kontraktor gagal membaiki kecacatan, ketidaksempurnaan, kekcutan atau apa-apa kerosakn lain seprti yang diarahkan, Pegawai yang diberikuasa berhak memotong kos membaiki dari baki wang yang dibayar kepada kontraktor atau, jika baki itu tidak mencukupi, mengeluarkan surat pengesyoran kepada Pusat Khidmat Kontraktor untuk menggantungkan pendaftaran kontraktor dan menghantar salinan-salinan surat tersebut kepada Pengarah Kerja Raya Negeri/Ketua Jabatan, Bahagian Pembagunan Bumiputera, Kementerian Kerja Raya dan Lembaga Pembangunan Perindustrian Pembinaan. Bagi kerja-kerja mekanikal/elektrikal, salinan surat hendaklah dihantar kepada Pengarah Cawangan Kerja Mekanikal/Pengarah Cawangan kerja Mekanikal.

16. PERATURAN MEMBAYAR SELEPAS SIAP

Bayaran sepenuhnya hanya akan dibayar kepada kontraktor setelah siap kerja dengan sempurna, dokumen kontrak telah ditandatangani dan Perakuan Siap Kerja dikeluarkan kepada kontraktor.

17. PERAKUAN SIAP KERJA

Pegawai yang diberikuasa hendaklah mengeluarkan Perakuan Siap Kerja sebaik sahaja kerja disapkan dengan sempurna dan memuaskan. Tarikh siap kerja bermula dari Tempoh Tanggungan Kecacatan.

18. PERAKUAN SIAP MEMBAIKI KECACATAN

Pegawai yang diberikuasa hendaklah mengeluarkan Perakuan Siap Membaiki Kecacatan sebaik sahaja kontraktor telah membaiki kecacatan, ketidaksempurnaan, kekecutan atau apa-apa jua kerosakan lain.

19. PEMATUHAN UNDNAG-UNDANG OLEH KONTRAKTOR

Kontraktor hendaklah mematuhi segala kehendak Undang-Undang Kecil dan Undang-Undang Berkanun di dalam Malaysia semasa pelaksanaan kerja. Kontraktor tiadak berhak menuntut sebarang kos dan bayaran tambahan pematuhannya dengan syarat-syarat ini.

20. PEMOTONGAN PEMBAYARAN

Kerja hendaklah disiapkan dalam tempoh yang ditetapkan dari tarikh pemilikan tapak bina. Kegagalan kontraktor menyiapkan kerja dalam tempoh tersebut atau dalam masa yang dilanjutkan oleh pegawai yang diberikuasa secara bertulis, maka denda sejumlah **RM100.00/hari** akan dikenakan pada tiap hari kelewatan. Denda akan dikenakan setelah Perakuan Tak Siap Kerja dikeluarkan kepada kontraktor.

21. DISENARAIHITAM DAN DENDA BAGI PENOLAKAN TAWARAN TENDER

Mana-mana kontraktor yang menolak tawaran Tender oleh Majlis yang ditawarkan mengikut harga bidaan syarikat, maka syarikat tersebut akan disenaraihitam oleh Majlis selama **dua (2) tahun** dan akan dikenakan denda sebanyak sepuluh (10%) peratus daripada nilai kontrak. Pembayaran denda hendaklah dijelaskan dalam tempoh **empat belas (14) hari** dari tarikh tawaran dikeluarkan kepada kontraktor.

Dokumen Meja Terkawal

22. PENAMATAN KONTRAK OLEH YANG DIPERTUA

Tiada apa-apa peruntukan di dalam kontrak ini boleh mengecualikan kuasa Yang DiPertua, Majlis Daerah Kuala Langat untuk menamatkan Kontrak ini yang pada pandangannya wajar tanpa apa-apa sebab dengan memberi **tujuh (7) hari** notis bertulis kepada kontraktor.

Tandatangan Pembekal : .....

Alamat/ Cop Pembekal : .....
.....
.....
.....

Tarikh : .....

Dokumen Meja Terkawal

SYARAT-SYARAT KONTRAK

Dokumen Meja Terkawal

GOVERNMENT OF MALAYSIA

STANDARD FORM OF CONTRACT TO BE USED WHERE BILLS OF QUANTITIES FORM PART OF THE CONTRACT

P.W.D. FORM 203A (Rev. 1/2010)

Hak Cipta Terpelihara Kerajaan Malaysia

Dokumen Meja Terkawal

CONDITION OF CONTRACT
TO BE USED WHERE BILLS OF QUANTITIES
FORM PART OF THE CONTRACT

PWD FORM 203A (Rev. 1/2010)

This form has been approved by Attorney General's Chamber

Dokumen Meja Terkawal

TABLE OF CONTENTS

Clause		Page
1.0	DEFINITIONS AND INTERPRETATIONS	1
2.0	CONTRACT PERIOD	3
3.0	THE S.O. AND S.O.'S REPRESENTATIVE	3
4.0	S.O.'S RIGHT TO TAKE ACTION	4
5.0	S.O.'S INSTRUCTIONS	4
6.0	SCOPE OF CONTRACT	5
7.0	CONTRACT SUM	6
8.0	CONTRACT DOCUMENTS	6
9.0	REPRESENTATIONS, WARRANTIES AND UNDERTAKINGS OF THE CONTRACTOR	7
10.0	OBLIGATIONS OF THE CONTRACTOR	8
11.0	INSPECTION OF SITE	8
12.0	PROGRAMME OF WORK	9
13.0	PERFORMANCE BOND/PERFORMANCE GUARANTEE SUM	10
14.0	INDEMNITY IN RESPECT OF PERSONAL INJURIES AND DAMAGE TO PROPERTY	10
15.0	INSURANCE AGAINST PERSONAL INJURIES AND DAMAGE TO PROPERTY	11
16.0	INDEMNITIES TO GOVERNMENT INRESPECT OF CLAIMS BY WORKMEN	12
17.0	EMPLOYEES' SOCIAL SECURITY ACT, 1969	12
18.0	INSURANCE OF WORKS	13
19.0	SETTING OUT	14
20.0	UNFIXED MATERIALS AND GOODS	14
21.0	COMPLIANCE WITH THE LAW	15
22.0	DESIGN	15
23.0	EMPLOYMENT OF WORKMEN	16
24.0	VARIATIONS	18
25.0	VALUATION OF VARIATION	18
26.0	BILL OF QUANTITIES	19
27.0	MEASUREMENT OF WORKS	20
28.0	PAYMENT TO CONTRACTOR AND INTERIM CERTIFICATES	20
29.0	ADJUSTMENT OF CONTRACT SUM	21
30.0	FLUCTUATION OF PRICE	21
31.0	FINAL ACCOUNT AND PAYMENT CERTIFICATE	21
32.0	EFFECT OF S.O.'S CERTIFICATES	22
33.0	DEDUCTION FROM MONEY DUE TO CONTRACTOR	22
34.0	PRIME COST / PROVISIONAL SUMS	22

Dokumen Meja Terkawal

Clause		Page
35.0	MATERIALS, GOODS AND WORKMANSHIP	23
36.0	INSPECTION AND TESTING OF MATERIALS, GOODS AND EQUIPMENT	23
37.0	CONSTRUCTIONAL PLANT, EQUIPMENT, VEHICLES AND MACHINERIES	24
38.0	POSSESSION OF SITE	24
39.0	COMPLETION OF WORKS	25
40.0	DAMAGES FOR NON-COMPLETION	26
41.0	SECTIONAL COMPLETION	27
42.0	PARTIAL OCCUPATION/TAKING OVER BY GOVERNMENT	27
43.0	DELAY AND EXTENSION OF TIME	28
44.0	CLAIMS FOR LOSS AND EXPENSE	29
45.0	INVESTIGATION BY THE GOVERNMENT AND OTHER PERSONS IN CASE OF ACCIDENT, FAILURE OR OTHER EVENT	30
46.0	ACCESS FOR WORKS, *ETC.*	30
47.0	SUB-CONTRACT OR ASSIGNMENT	31
48.0	DEFECTS AFTER COMPLETION	31
49.0	UNFULFILLED OBLIGATIONS	32
50.0	SUSPENSION OF WORKS	32
51.0	EVENTS AND CONSEQUENCES OF DEFAULT BY THE CONTRACTOR	33
52.0	TERMINATION ON NATIONAL INTEREST	36
53.0	TERMINATION ON CORRUPTION, UNLAWFUL OR ILLEGAL ACTIVITIES	36
54.0	PAYMENTS UPON SUSPENSION AND TERMINATION ON NATIONAL INTEREST	37
55.0	EVENTS AND CONSEQUENCES OF DEFAULT BY THE GOVERNMENT	37
56.0	CERTIFICATE OF TERMINATION COSTS	38
57.0	SURVIVING RIGHTS	39
58.0	EFFECT OF FORCE MAJEURE	39
59.0	SITE AGENT AND ASSISTANTS	40
60.0	NOMINATED SUB-CONTRACTORS AND/OR NOMINATED SUPPLIERS	40
61.0	PAYMENT TO NOMINATED SUB-CONTRACTOR OR SUPPLIERS	41
62.0	NO LIABILITY OF GOVERNMENT TO NOMINATED AND/OR SUB-CONTRACTOR OR SUPPLIER	41
63.0	RESPONSIBILITIES OF CONTRACTOR TO NOMINATED AND / OR SUB-CONTRACTORS OR SUPPLIERS	42
64.0	INTELLECTUAL PROPERTY RIGHTS	42
65.0	ANTIQUITIES	42
66.0	ARBITRATION	43
67.0	NOTICE, *ETC.*	44
68.0	SAFETY AT THE SITE	45

Dokumen Meja Terkawal

Clause		Page
69.0	ADVANCE PAYMENT	45
70.0	AMENDMENT	46
71.0	CONFIDENTIALITY	46
72.0	STAMP DUTY	47
73.0	SEVERABILITY	47
74.0	WAIVER	47
75.0	LAWS APPLICABLE	47
76.0	SUCCESSORS BOUND	47
77.0	EPIDEMICS AND MEDICAL ATTENDANCE	48
78.0	TECHNOLOGY TRANSFER	48
79.0	GENERAL DUTIES AND PERFORMANCE STANDARD	48
80.0	RESTRICTION AND PROCEDURE ON USE OF IMPORTED MATERIALS AND GOODS	48
81.0	TIME	49

Dokumen Meja Terkawal

CONTRACT NO : _____ of 20 _____

EXPENDITURE to be met from: **Head .....**

Sub-head .....

Year of .....

A CONTRACT made on ..... day of ..... 20..... between the Government of Malaysia (hereinafter referred to as the "Government") of the one part and .....
(Company No.: .....) (hereinafter called the "Contractor") and having its registered address at .....
..... of the other part.

(The Government and the Contractor shall hereinafter individually be referred to "Party" or collectively as the "Parties")

WHEREAS:

A. The Government is desirous of .....
.....
at ..... (hereinafter referred to as the 'Works') and has caused Drawings, Bills of Quantities, Specification describing the work to be done to be prepared.

B. The said Drawings numbered ..... (hereinafter referred to as the "Contract Drawings"), and the Bills of Quantities, Specification, Form of Tender and Letter of Acceptance of Tender have been signed by or on behalf of the Parties hereto.

NOW IT IS HEREBY AGREED AS FOLLOWS:

1.0 DEFINITIONS AND INTERPRETATION

1.1 Definition

Unless the context otherwise requires, this Contract or an item or entry in the Appendices specifically otherwise provides, the following words and phrases in this Contract and the

Dokumen Meja Terkawal

Appendices shall have the meaning given below or ascribed in the clauses or Appendix item to which reference is made:

(a)	**"Contract"**	means this contract and the appendices attached hereto;
(b)	**"Contract Documents"**	means the documents forming the tender and acceptance thereof including: - Form of Tender; - Letter of Acceptance of Tender; - Contract Drawings; - Bills of Quantities; - Specifications; - Treasury's Instructions; - .....; - .....; - .....; and all these documents shall be complementary to one another;
(c)	**"Contractor"**	means the person or persons, sole proprietor, partnership, firm or company whose tender for the Works has been accepted and who has or have signed this Contract and includes the Contractor's personal representatives, heirs, successors, executors, administrators, servant and agent;
(d)	**"Contract Period"**	means the time frame stipulated in clause 2;
(e)	**"Contract Sum"**	means the sum stipulated in clause 7;
(f)	**"Date for Completion"**	means the date fixed and stated in Appendix or any other date as provided for in clause 39;
(g)	**"Defects Liability Period"**	means the period stated in Appendix or if none stated, the period is twelve (12) months from the date of practical completion certified by the S.O. as provided for under clause 39.3;
(h)	**"Nominated Sub-Contractor" or "Nominated Supplier"**	means all specialist, merchants, tradesmen and others executing any work or services, or supplying any materials or goods for which Prime Cost Sum (or P.C. Sums) are included in the Bills of Quantities or which the S.O. has given written instructions in regard to the expenditure of Provisional Sum and who may be nominated by the S.O. and employed by the Contractor as Sub-contractors or Suppliers;
(i)	**"On-Cost Charges"**	means any cost and expenses reasonably incurred by the Government;
(j)	**"Officer Named"**	means officer empowered to take action on behalf of the Government pertaining to clauses .....;
(k)	**"Prime Cost" or**	means a sum for works or services to be executed by a Nominated Sub-Contractor or sums for materials or goods to be

Dokumen Meja Terkawal

	abbreviation "P.C. Sum"	obtained from a Nominated Supplier;
(l)	**"Provisional Sum"**	means a sum for work or for the supply of goods or materials which cannot be defined or detailed at the time the tender documents are issued;
(m)	**"Site"**	means the land and other places on, above, under, in or through which the Works are to be executed and any other lands or places provided or approved by the Government for working space or any other purposes as may be specifically designated in this Contract and whether the same may be on the Site or not;
(n)	**"S.O."**	means the Superintending Officer who shall be .....and/or his successors in office;
(o)	**"S.O.'s Representatives"**	means any person or persons delegated or authorised in writing by the S.O. to perform any of the duties of the S.O. as may be from time to time notified in writing to the Contractor by the S.O. pursuant to clause 3.3(a) of this Contract;
(p)	**"Works"**	means the works specified in the Contract Documents and shall include temporary works.

1.2 Interpretation

(a) The terms "approved or approval" and "directed or direction" wherever used in this Contract shall be in writing.

(b) Words importing the singular include the plural and vice versa where the context requires.

(c) The headings are for convenience of reference only and shall not be deemed to be part of this Contract or be taken into consideration in the interpretation or construction of this Contract.

(d) Unless otherwise specifically stated, a reference in this Contract and the Appendices to any clause means that clause in this Contract.

(e) This Contract and the Appendices are to be read as a whole and the effect or operation of any clause in this Contract or item in or entry in the Appendices shall, unless otherwise specifically stated, be read subject to any relevant qualification or modification in any other clauses in this Contract or item in or entry in the Appendices.

2.0 CONTRACT PERIOD

The Contract Period shall be for a period of ..... commencing from ..... ending on .....

3.0 THE S.O. AND S.O.'S REPRESENTATIVE

3.1 Duties of S.O. and S.O.'s Representative

The S.O. shall be responsible for the overall supervision and direction of the Works. All matters regarding the Works shall be dealt with by the Contractor with the S.O.

Dokumen Meja Terkawal

3.2 **S.O.'s Representative**

(a) The S.O. may from time to time appoint such number of S.O.'s Representative as he deems fit.

(b) The S.O.'s Representative shall be responsible to the S.O. and his duties are to watch and supervise the Works and to test and examine any materials or goods to be used or workmanship employed in connection with the Works.

3.3 **S.O.'s Authority to Delegate**

(a) The S.O. may from time to time in writing delegate to the S.O.'s Representative any of the powers and authorities vested in the S.O. as listed in the letter of delegation and shall furnish to the Contractor a copy of all such written delegation of powers and authorities.

(b) Any instruction or approval given by the S.O.'s Representative to the Contractor within the terms of such delegation shall bind the Contractor and the Government as though it had been given by the S.O. PROVIDED THAT failure of the S.O.'s Representative to disapprove any work or material shall not prejudice the power of the S.O. thereafter to disapprove such work or materials and to order the pulling down, removal or breaking up thereof.

(c) If the Contractor is not satisfied with any decision of the S.O.'s Representative, the Contractor shall refer the matter to the S.O. who shall confirm, reverse or vary the decision of the S.O.'s Representative.

(d) The delegation under this clause shall not preclude the S.O. from himself exercising or performing at any time any of the delegated powers and duties.

4.0 S.O.'S RIGHT TO TAKE ACTION

4.1 Notwithstanding any provision in this Contract it is hereby agreed that:

(a) the power of the S.O. to issue instruction requiring a variation under clause 24 shall be subject to the financial limits as set out in Appendix 1 hereto. If the instruction for a variation under clause 24 is more than the financial limits as set out in the Appendix 1, the S.O. shall obtain the prior written approval of the relevant authorities of the Government; and

(b) the right to act on behalf of the Government in respect of any matter which arises out of the provisions of clauses 51, 52, 53, 58 and 66 shall be exercised by the Officer Named in Appendix 1;

4.2 The Contractor shall not be entitled to extension of time or any additional cost or expense or whatsoever arising from compliance with this clause 4.

5.0 S.O.'S INSTRUCTIONS

5.1 The S.O. may from time to time issue further drawings, details and/or written instructions (all of which are hereafter collectively referred to as "S.O.'s instructions") in regard to-

(a) the Variation as referred to in clause 24 hereof;

(b) any discrepancy in or between the Contract Documents as referred to in clause 8.2(b) hereof;

Dokumen Meja Terkawal

(c) the removal from the Site of any materials or goods brought thereon by the Contractor and the substitutions of any other materials or goods therefore;

(d) the removal and/or re-execution of any works executed by the Contractor;

(e) the dismissal from the Works of any person mentioned in clause 23.6 hereof employed thereupon;

(f) the opening up for inspection of any work covered up;

(g) the amending and making good of any defects whatsoever under clause 48;

(h) any matter which is necessary and incidental to the carrying out and completion of the Works under this Contract; and

(i) any matter in respect of which the S.O. is expressly empowered by this Contract to issue instructions.

5.2 All instructions issued by the S.O. shall be in writing. The Contractor shall forthwith comply with all instructions issued to him by the S.O. If such instruction is given orally, the S.O. shall then issue a written instruction within seven (7) days from the date of such oral instruction is given.

5.3 If within seven (7) days after receipt of a written notice from the S.O. requiring compliance of an instruction and the Contractor does not comply therewith, then the S.O. without prejudice to any other rights or remedies available to the Government under this Contract, undertake the work departmentally or employ and pay another Contractor or any other persons to execute any work whatsoever which may be necessary to give effect to such instruction. All costs and expenses incurred in connection with such employment (including On-Cost Charges), shall be deducted from any money due or to become due to the Contractor under this Contract, and failing which such deductions shall be recovered from the Performance Bond or as a debt due from the Contractor.

5.4 The Contractor shall be responsible for all costs and expenses incurred by the Government in carrying out the Works under clause 5.3 and On-Cost Charges (calculated by applying the Percentage of On-Cost Charges stated in Appendix hereto to the amount incurred). The Government shall be entitled to deduct such costs, expenses and On-cost Charges or any part thereof from any monies due or to become due to the Contractor under this Contract or to recover the same from the Performance Bond or as a debt due from the Contractor.

6.0 SCOPE OF CONTRACT

6.1 The Contractor shall upon and subject to this Contract, construct and complete the Works using materials, goods and workmanship of the quality and standards therein specified in accordance with best industry practice.

6.2 The Contractor shall also undertake any consequential work in relation to the construction and completion of Works on the Site i.e. removal/diversion of public sewer, water mains, electrical mains, gas mains and telephone mains and the installation of permanent connections thereto shall be borne by the Government. The Government shall reimburse the Contractor for such costs by adding it to the Contract Sum PROVIDED THAT such cost have not already been included in the Contract Sum by way of a Provisional Sum or otherwise.

PROVIDED FURTHER any temporary connection shall be obtained by the Contractor with no additional cost to the Government for purpose of carrying out their work.

6.3 The Contractor shall also make good any defect, imperfection, shrinkage or any other fault whatsoever which may appear during the Defects Liability Period in accordance with clause 48 hereof.

Dokumen Meja Terkawal

7.0 CONTRACT SUM

The Government hereby covenants to pay the Contractor in consideration of the construction and completion of the Works and making good of any defects whatsoever to the Works the sum of Ringgit:

..... (RM.....) or such other sum as shall become payable under and at the times and in the manner specified in this Contract.

8.0 CONTRACT DOCUMENTS

8.1 Custody of the Contract Documents

(a) The Contract shall be prepared in two (2) original copies. The original copies of the Contract shall remain in the custody of the S.O. and the Contractor.

(b) Immediately after the execution of this Contract, the S.O. shall furnish to the Contractor without any charge (unless he shall have been previously furnished) with:

(i) two (2) copies of the Contract Drawings; and

(ii) two (2) copies of the unpriced Bills of Quantities and (if requested by the Contractor) one copy of the priced Bills of Quantities.

(c) The S.O. shall, as and when necessary and without charge to the Contractor, furnish him with two (2) copies of such further working drawings or details as are reasonably necessary either to explain and amplify the Contract Drawings or the Specification (if any) or to enable the Contractor to construct and complete the Works in accordance with this Contract. PROVIDED THAT nothing contained in the said working drawings or details shall impose any obligation beyond those imposed by the Contract Documents.

(d) The Contractor shall keep one copy of the Contract Drawings, the Specification (if any), unpriced Bills of Quantities, priced Bills of Quantities (if any) and other like documents referred to in sub-clause (c) hereof on the Site and the S.O. shall at all reasonable times have access to the same.

(e) Upon final payment being made pursuant to the issuance of Final Account and Payment Certificate under clause 31, the Contractor shall return to the S.O. all drawings, details, specifications, unpriced copy of Bill of Quantities and priced Bill of Quantities, if any.

(f) None of the documents hereinbefore mentioned shall be used by the Contractor for any purpose other than this Contract.

8.2 Sufficiency of Contract Documents

(a) The Contract documents are to be taken as mutually explanatory of one another. The Contractor shall provide everything necessary for the proper execution of the Works until its completion according to the true intent and meaning of the Contract Documents taken together whether the true intent and meaning may or may not be particularly shown or described PROVIDED THAT it can be reasonably inferred therefrom.

(b) If the Contractor shall find any discrepancy in or divergence between any two or more of the Contract Documents including a discrepancy or divergence between parts of any one of them, he shall immediately give to the S.O. a written notice specifying the

Dokumen Meja Terkawal

discrepancy or divergence and the S.O. shall issue instructions in regard thereto PROVIDED ALWAYS that such discrepancy or divergence shall not vitiate this Contract.

9.0 REPRESENTATIONS, WARRANTIES AND UNDERTAKINGS OF THE CONTRACTOR

9.1 Representations and Warranties

The Contractor hereby represents and warrants to the Government that–

(a) it is a corporation validly existing under the laws of Malaysia*;

(b) the Contractor has obtained a valid registration with the Construction Industry Development Board;

(c) it has the corporate power to enter into and perform its obligations under this Contract and to carry out the transactions and to carry on its business as contemplated by this Contract*;

(d) it has taken all necessary corporate actions to authorize the entry into and performance of this Contract and to carry out the transactions contemplated by this Contract*;

(e) as at the execution date, neither the execution nor performance by it of this Contract nor any transactions contemplated by this Contract will violate in any respect any provision of–

(i) its Memorandum and Articles of Association; or

(ii) any other document or agreement which is binding upon it or its asset*;

(f) no litigation, arbitration, tax claim, dispute or administrative proceeding is presently current or pending or, to its knowledge, threatened, which is likely to have a material adverse effect upon it or its ability to perform its financial or other obligations under this Contract;

(g) this Contract constitutes a legal, valid and binding obligation of the Contractor and is enforceable in accordance with its terms and conditions;

(h) it has necessary financial and technical capability to undertake the Works,

and the Contractor acknowledges that the Government has entered into this Contract in reliance on its representations and warranties as aforesaid.

9.2 Undertakings of the Contractor*

The Contractor undertakes that-

(a) it shall comply with all requirements, statutory or otherwise, regulating or relating to the conduct, trade, business or profession of a contractor, and the Contractor shall be fully and solely liable for all costs incurred thereby;

---

* *applicable only if the Contractor is a company registered under the Companies Act 1965.*

Dokumen Meja Terkawal

(b) it shall pay all taxes that may be imposed on the profits made in respect of this Contract in accordance with the applicable laws; and

(c) it shall ensure that all his employees, including non-Malaysian personnel, comply with all relevant laws to which they are subject to including payment of income tax, which in respect thereto the Contractor shall make such deductions from the salaries of his employees as may be lawfully imposed by the relevant authority.

10.0 OBLIGATIONS OF THE CONTRACTOR

The Contractor shall–

(a) construct, complete, test and commission the Works in accordance with the Specifications, Contract Drawings and any other documents specified in the Contract Documents;

(b) perform the Works in a proper manner and in accordance with good management practice and to the best advantage of the Government;

(c) take all appropriate measures expected of a contractor providing similar works to ensure that the Works comply with the requirements of this Contract;

(d) perform the Works and discharge its obligations as contained in this Contract by exercising professional judgment and practice, requisite skill, care and diligence. In performing the Works, the Contractor shall provide well-outlined procedures in the form agreed by the Government for reporting and co-ordination purposes;

(e) at all times perform the Works in such manner as will always safeguard and protect the Government's interest in relation to the Works and take all necessary and proper steps to prevent abuse or uneconomical use of facilities, if any, made available by the Government to the Contractor;

(f) inform the Government immediately in writing of the occurrence of any factor or event, which is likely to affect the Works. Such notification shall not be construed as a discharge of any of the Contractor's obligations under this Contract;

(g) provide and maintain throughout the Contract Period such number, categories of qualified and competent personnel necessary to perform the Works;

(h) provide and maintain at its own cost and expense all equipment and materials necessary for the proper and effective performance of the Works;

(i) instruct and supervise its staffs and sub-contractor in carrying out the Works' repairs and other works in relation to the Works;

(j) make good any defect, imperfection, shrinkage or any other fault whatsoever which may appear during the Defects Liability Period; and

(k) carry out any other obligations and responsibilities under this Contract.

11.0 INSPECTION OF SITE

11.1 The Contractor shall be deemed to have inspected and examined the Site and its surroundings and to have satisfied himself before submitting his tender as to the following:

(a) the nature of the ground and subsoil;

Dokumen Meja Terkawal

(b) the form and nature of the Site;

(c) the extent and nature of the work, materials and goods necessary for the completion of the Works;

(d) the means of communication with and access to the Site;

(e) the accommodation he may require; and

(f) in general to have obtained for himself all necessary information as to risks, contingencies and all circumstances influencing and affecting his tender.

11.2 Any information or document forwarded by the Government to the Contractor shall not relieve the Contractor of his obligations under the provisions of this clause.

12.0 PROGRAMME OF WORK

12.1 Within fourteen (14) days from the receipt of the Letter of Acceptance by the Government, the Contractor shall submit to the S.O for his approval -

(a) a work programme for the carrying out of the Works (hereinafter referred to as "Work Programme") in such form and details as determined by the S.O. showing the detail activities of the Works so as to enable the Government to monitor the progress thereof; and

(b) a general description in writing, of the arrangements and methods of construction which the Contractor proposes to adopt for the carrying out of the Works.

12.2 The S.O shall within ..... (....) days after receipt of the Contractor's programme:

(i) approve the Work Programme in writing; or

(ii) reject the Work Programme in writing with reasons and/or request modifications; and/or

(iii) request the Contractor to supply further information to clarify or substantiate the Work Programme or to satisfy the S.O as to its reasonableness having regard to the Contractor's obligations under the Contract,

PROVIDED THAT if none of the above actions is taken within the said period of ..... (....) days the S.O shall be deemed to have approved the Work Programme as submitted.

12.3 The Contractor shall upon receipt from the S.O any request under clause 12.2(ii) or (iii) resubmit a modified Work Programme or provide further information as requested.

12.4 If at any time it should appear to the S.O that the actual progress of Works does not conform to the approved Work Programme referred to herein before the Contractor shall produce, at the request of the S.O., a revised Work Programme showing the modifications to the approved Work Programme necessary to ensure completion of the whole Works within the time for completion provided for in clause 39 hereof or extended time granted pursuant to clause 43 hereof.

12.5 The submission to and approval by the S.O or the S.O's Representative of such Work Programme or the furnishing of such particulars shall not relieve the Contractor of any of his duties or responsibilities under this Contract.

Dokumen Meja Terkawal

13.0 PERFORMANCE BOND/PERFORMANCE GUARANTEE SUM

13.1(a) The Contractor shall, on the date of the possession of Site, provide a Performance Bond or Performance Guarantee Sum as the case may be substantially in the form as in Appendix issued by an approved licensed bank or financial institution incorporated in Malaysia in favour of the Government for a sum equivalent to five percent (5%) of the total Contract Sum as specified in Appendix to secure the due performance of the obligations under this Contract by the Contractor. The Performance Bond shall remain valid and effective until twelve (12) months after the expiry of the Defect Liability Period or the issuance of the Certificate of Completion of Making Good Defects, whichever is the later.

(b) If the Contractor fails to submit the said Performance Bond as specified in sub-clause (a) above on the date of possession of site, then the Contractor shall be deemed to have opted for Performance Bond in the form of Performance Guarantee Sum as provided for under clause 13.2 hereof.

13.2 The Contractor may opt for a Performance Bond in the form of Performance Guarantee Sum in lieu of the Bank, Insurance or Finance Company Guarantee as specified in clause 13.1 hereof whereby deductions of ten percent (10%) shall be made from the first interim payments and subsequent interim payment until the total amount deducted aggregate to a sum equivalent to five (5) percent of the Contract Sum. The amount deducted shall be retained by the Government up to twelve (12) months after the expiry of the Defect Liability Period or the issuance of the Certificate of Completion of Making Good Defects, whichever is the later.

13.3 Notwithstanding anything contained in this Contract, the Government shall be entitled at any time to call upon the Performance Bond, wholly or partially, in the event that the Contractor fails to perform or fulfil its obligations under this Contract and such failure is not remedied in accordance with this Contract.

13.4 If a payment is made to the Government pursuant to any claim under the Performance Bond, the Contractor shall issue to the Government further security in the form of additional performance bond or bonds for an amount not less than the amount so paid to the Government on or prior to the date of such payment so that the total sum of the Performance Bond shall be maintained at all times at the value specified in clause 13.1(a).

13.5 The Performance Bond (or any balance thereof remaining for the credit of the Contractor) may be released or refunded to the Contractor on the completion of making good of all defects, shrinkages or other faults which may appear during the Defects Liability Period and upon the giving of the Certificate of Completion of Making Good Defects for the whole of the Works under clause 48.

13.6 Notwithstanding the above, in the event that this Contract is terminated under clause 51 hereof the said Performance Bond or any balance thereof shall be forfeited.

14.0 INDEMNITY IN RESPECT OF PERSONAL INJURIES AND DAMAGE TO PROPERTY

14.1 The Contractor agrees with the Government that–

(a) it shall perform all of its obligations under this Contract at its own risk and releases, to the fullest extent permitted by law, the Government and their agents and servants from all claims and demands of every kind resulting from any accident, damage, injury or death arising from the carrying out of the Works except where such accident, damage, injury or death is caused or contributed to by any act or omission or negligence of the Government or its agents and servants. The Contractor expressly agrees that in the absence of any such act, omission or negligence as aforesaid the Government shall have no responsibility or liability whatsoever in relation to such accident, damage, injury or death;

Dokumen Meja Terkawal

(b) it shall indemnify and keep indemnified the Government from and against all actions, suits, claims or demands, proceedings, losses, damages, compensation, costs (including legal cost), charges and expenses whatsoever to which the Government shall or may be or become liable in respect of or arising from–

(i) the negligent use, misuse or abuse by the Contractor or its personnel, servants, agents or employees appointed by the Contractor;

(ii) any loss or damage to property or injury of whatsoever nature or kind and howsoever or wherever sustained or caused or contributed to by carrying out of the Works by the Contractor to any person and not caused by the negligence or wilful act, default or omission of the Government, its agents or servants; or

(iii) any loss, damage or injury from any cause whatsoever to property or persons affected by the Works to the extent to which the same is occasioned or contributed to by the act, omission, neglect, breach or default of the Contractor or personnel, servants, agents or employees; and

(c) the obligations under this clause shall continue after the expiry or earlier termination of this Contract in respect of any act, deed, matter or thing happening before such expiration or termination of this Contract.

14.2 The Contractor shall indemnify, protect and defend at its own cost and expense, the Government and its agents and servants from and against all actions, claims and liabilities arising out of acts done by the Contractor in the performance of this Contract.

15.0 INSURANCE AGAINST PERSONAL INJURIES AND DAMAGE TO PROPERTY

15.1 Taking of Insurance

(a) Without prejudice to his liability to indemnify the Government under clause 14 hereof, the Contractor shall, as a condition precedent to the commencement of any work under this Contract, effect and maintain such insurances whether with or without an excess amount as specified in Appendix hereto as are necessary to cover the liability of the Contractor and all sub-contractors, whether nominated or otherwise.

(b) Such insurance shall be for the purpose of personal injuries or death, damage or loss to property, movable or immovable, arising out of, or in the course of, or by reason of the execution of the Works and caused by any negligence, omission, breach of contract or default of the Contractor or any sub-contractor, whether nominated or otherwise, or of any servants or agents of the Contractor or of any such sub-contractor, whether nominated or otherwise. Where an excess amount is specified in Appendix, the Contractor shall bear the amount of such excess. The policy or policies of insurance shall contain a cross liability clause indemnifying each of the jointly insured against claims made by on him by the other jointly insured.

(c) Such insurance as referred to under sub-clause (a) hereof shall be effected with an insurance company as approved by the Government and maintained in the joint names of the Government and Contractor and all sub-contractors, whether nominated or otherwise. Such insurance shall cover from the period of the date of possession of site until the date of issuance of Certificate of Making Good Defects for any claim occasioned by the Contractor or any sub-contractor in the course of any operations carried out by the Contractor or any sub-contractor for the purpose of complying with his obligations under Clause 48 hereof.

15.2 Production of Policies

It shall be the duty of the Contractor to produce and shall deposit the relevant policy or policies of the insurance together with receipts in respect of premiums paid to the S.O., whether demanded or not.

Dokumen Meja Terkawal

15.3 Default in Insuring

If the Contractor fails to effect or renew such insurances as are required to be effected and maintained under this Contract, the Government or the S.O. on its behalf may effect or renew such insurance and shall be entitled to deduct a sum equivalent to the amount in respect of the premiums paid and On-Cost Charges (calculated by applying the 'Percentage for On-cost Charges' stated in Appendix hereto to the premiums paid), from any money due or to become due to the Contractor under this Contract or to recover the same from the Performance Bond or as a debt due from the Contractor.

15.4 Cancellation of Insurance

(a) The Contractor shall ensure that any insurance policy effected hereto shall only be cancelled by the insurer after the expiry of thirty (30) days from the date of receipt by the Government of a written notice from the insurer advising of such impending cancellation PROVIDED THAT the Contractor has been issued with the Certificate of Making Good Defects in accordance with clause 48.

(b) The Contractor shall not at any time permit or cause to be done any act, matter or thing which may result in any insurance effected by virtue of this Contract being vitiated or rendered void or voidable or whereby the rate of the premium on any insurance effected shall be liable to be increased.

15.5 Loss or Damage Occasioned by Insured Risk

(c) In the event of any damage or loss occurring during the performance of this Contract, the Contractor shall repair, replace or make good such damage or loss from the amount of insurance claimed, if sufficient, or if insufficient, using his own resources.

16.0 INDEMNITIES TO GOVERNMENT IN RESPECT OF CLAIMS BY WORKMEN

16.1 Workmen Compensation

(a) The Contractor shall be liable for and shall indemnify and keep indemnified the Government and its officers or servants from all liabilities arising out of claims by any workman employed by the Contractor in and for the performance of this Contract for payment of compensation under or by virtue of the Workmen's Compensation Act 1952 and the Employee's Social Security Act 1969 or any other law amending or replacing such law and from all costs and expenses incidental and consequential thereto.

(b) The Contractor shall effect and maintain throughout the Contract Period a "Workmen Compensation Insurance" or any other applicable insurance for its personnel, servants, agents or employees required under the laws of Malaysia.

17.0 EMPLOYEES' SOCIAL SECURITY ACT, 1969

17.1 Registration with SOCSO

Without prejudice to his liability to indemnify the Government under clause 16, the Contractor shall register or cause to register all local workmen employed in the execution of the Works and who are subject to registration under the Employee's Social Security Scheme ("the SOCSO Scheme") in accordance with the Employee's Social Security Act 1969 or any subsequent modification or re-enactment of the said Act. For the purpose of this sub-clause, the term "local workmen" shall include workmen who are Malaysian citizens and those who have permanent resident status.

Dokumen Meja Terkawal

17.2 **Contribution to SOCSO**

The Contractor shall submit the Code Number and Social Security Numbers of all the workmen registered under the SOCSO scheme to the S.O. for verification. The Contractor shall make payment of all contribution from time to time on the first contribution day on which the same ought to be paid and until the completion of this Contract and it shall be the duty of the Contractor to produce to the S.O. contribution statement or payment vouchers as evidence of payment of such contribution, whether demanded or not.

17.3 **Default in Complying with SOCSO**

If the Contractor fails to comply with the terms of this Clause, the Government or the S.O. on its behalf may without prejudice to any other remedy available to the Government for breach of any terms of this Contract:

(a) withhold an amount from any money which would otherwise be due to the Contractor under this Contract and which in the opinion of the S.O. will satisfy any claims for compensation by workmen that would have been borne by SOCSO Scheme had the Contractor not made default in maintaining the contribution; and/or

(b) pay such contributions as have become due and remain unpaid and deduct the amount of such contributions including On-Cost Charges (calculated by applying the Percentage of On-Cost Charges stated in Appendix to the contributions paid), from any money due or to become due to the Contractor under this Contract, and failing which such contributions shall be recovered from the Performance Bond or as a debt due from the Contractor.

18.0 INSURANCE OF WORKS

18.1 **Taking of Insurance**

(a) The Contractor shall in the joint names of the Government and the Contractor insure against loss and damage by fire, lightning, explosion, storm, tempest, flood, ground subsidence, bursting or overflowing of water tanks, apparatus or pipes, aircraft and other aerial devices or articles dropped therefrom, riot and civil commotion, all work executed and all unfixed materials and goods, delivered to, placed on or adjacent to the Works and intended therefore (but excluding temporary buildings, plant, tools and equipment owned or hired by the Contractor or any sub-contractor, nominated or otherwise) to the full value thereof (plus any amount which may be specifically stated in Appendix or elsewhere in the Contract Documents) and shall keep such work, materials and goods so insured until the completion of the whole of the Works, notwithstanding any arrangement for Sectional Completion or Partial Occupation by the Government under this Contract. Such insurance policy or policies shall provide expressly for payment in the first place to the Government of any insurance monies due under the policy or policies.

(b) The said insurance with or without an excess clause as specified in Appendix hereto shall be effected with an insurance company approved by the S.O. and it shall be the duty of the Contractor to produce to the S.O. the said policy or policies and the receipts in respect of the premium paid. Where an excess clause is specified in Appendix, the Contractor shall bear the amount of such excess.

18.2 **Default in Insuring**

If the Contractor fails to effect or renew such insurance as are necessary under this clause, the Government or the S.O. on its behalf may renew such insurance and pay the premium in respect thereof and deduct the amount so expended including On-Cost Charges (calculated by applying the 'Percentage of On-cost Charges' stated in Appendix to the premiums paid), from any money

Dokumen Meja Terkawal

due or to become due to the Contractor under this Contract, and failing which such premium shall be recovered from the Performance Bond or as a debt due from the Contractor.

18.3 **Payment of Insurance in the Event of any Loss/Damage**

Upon the occurrence of any loss or damage to the Works or unfixed materials or goods prior to the date the Works has been certified as practically completed by the S.O. in the Certificate of Practical Completion, the Contractor shall notwithstanding that settlement of any insurance claim has not been completed, with due diligence restore, replace or repair the same, remove and dispose of any debris and proceed with the carrying out and completion of the Works. All money if and when received from the insurance under this clause shall be paid in the first place to the Government and then (less any such amounts as are specifically required in Appendix or elsewhere in the Contract Documents) be released to the Contractor by instalments on the certificate for payment issued by the S.O., calculated as from the date of receipt of the money in proportion to the extent of the work of restoration, replacement or repair and the removal and disposal of debris previously carried out by the Contractor. The Contractor shall not be entitled to any payment in respect of the work of restoration, replacement or repair and the removal and disposal of debris other than the money received under the said insurance.

18.4 **Cancellation of Insurance Policy**

The Contractor shall ensure that any insurance policy effected hereto shall only be cancelled by the insurer after the expiry of thirty (30) days from the date of receipt by the Government of a written notice from the insurer advising of such impending cancellation PROVIDED THAT the Contractor has been issued with the Certificate of Making Good Defects in accordance with clause 48.

19.0 SETTING OUT

19.1 The Contractor shall be responsible for the true and proper setting out of the Works and for the correctness of the positions, levels, dimensions and alignments of all parts of the Works and for the provisions of all necessary instruments, appliances and labour in connection therewith.

19.2 If at any time during the progress of the Works any error in the positions, levels, dimensions or alignments of any part of the Works is discovered, the Contractor shall at his own expense rectify such error unless such error is based on incorrect data supplied in writing by the S.O.'s Representative in which case the expense of rectifying shall be borne by the Government.

19.3 If at any time during the progress of the Works, any error shall appear or arise in the setting-out required to construct the Works or in the position, levels, dimensions or alignment of any part of the Works, the Contractor, on being required to do so by the S.O., shall at his own expense rectify such error to the satisfaction of the S.O. The checking of any setting out of or of any line or level by the S.O. shall not in any way relieve the Contractor of his responsibility for the correctness thereof and the Contractor shall carefully protect and preserve all things used in the setting-out required for the construction of the Works until the S.O. agrees that the said things may be abandoned.

19.4 The Contractor shall give to the S.O. without charge such information as may be required by the S.O. to enable him to check the setting-out required for the construction of the Works including interpreting any marks made by the Contractor for the purpose of setting out.

20.0 UNFIXED MATERIALS AND GOODS

Unfixed materials and goods delivered to, placed on or adjacent to the Site and intended for incorporation therein, shall not be removed except for use upon the Works, unless the S.O. has consented in writing to such removal. Where the S.O. has included the value of such materials or

Dokumen Meja Terkawal

goods in any certificate in accordance with clause 28, under which the Contractor has received payment, such materials and goods shall become the property of the Government, but the Contractor shall remain responsible for loss or damage to the same.

21.0 COMPLIANCE WITH THE LAW

21.1 The Contractor shall comply in all respects (including the giving of all notices and the paying of all fees required) with any law, regulation or by-law, or any order or directive issued by any public authority or public service company (hereinafter referred to as "Statutory Requirements"), relating to the Works or, in the case of public authority or public service company, with those systems the same are or will be connected. The Contractor shall submit to the S.O. all approvals received by the Contractor in connection therein. The Contractor shall keep the Government indemnified against all penalties and liability of every kind for breach of any such Statutory Requirements.

21.2 If after the Date of Tender (as specified in Appendix) there is any change or amendment in any written law, regulations and by-laws which necessitates any variation to the Works, the Contractor shall, before making such variation, give to the S.O. a written notice specifying and giving the reason for such variation and apply for the S.O.'s instruction in respect of the matter.

22.0 DESIGN

22.1 Design Liability

(a) Notwithstanding any design and specifications supplied by the Government, if the Contractor is required under this Contract to undertake the design of any part of the Works which is a stand alone design as determined by the Government, the Contractor shall ensure that such design is suitable, functional, safe, compatible and integrates with the design and specifications of the Works and it shall be undertaken, approved and endorsed by a competent and registered professional.

(b) The Contractor shall submit to the S.O. all drawings, specifications, calculations and any other relevant information pertaining to the stand alone design for approval. No work shall commence without prior written consent of the S.O.

(c) The Contractor shall be fully responsible and guarantee the Government that the stand alone design, integration, execution of the Works, materials and workmanship for the Works or part of the Works are independent of fault, suitable, functional, safe and compatible with the requirements of the Government.

(d) The approval of the stand alone design by the S.O pursuant to sub-clause (b) shall not absolve the Contractor from its responsibility under sub-clause (c) and the Contractor shall be liable and shall fully indemnify and keep the Government indemnified for any design defects, damage, inadequacies or insufficiency of such design.

22.2 Design Guarantee Bond

(a) The Contractor shall provide a Design Guarantee Bond for the stand alone design issued by an approved licensed bank or financial institution of the sum of Ringgit ... (RM...) amounting to 5% of the value of the said part of the Works substantially in the form as in Appendix [.....] upon or before the issuance of the Certificate of Practical Completion of the Works as a security for the Contractor's obligations and warranties under Clause 22.1. Such Design Guarantee Bond shall remain valid for a period of 5 years from the date of practical completion of the Works.

(b) If any defect or damage shall occur to that particular part of the Works as a result of any defect, fault, insufficiency, imperfection, shrinkages or inadequacy in the stand alone

Dokumen Meja Terkawal

design including workmanship, materials or equipment which has become defective arising from design fault then the approved licensed bank or financial institution issuing the Design Guarantee Bond pursuant to sub-clause (a) above shall pay to the Government, on demand by the Government in writing notwithstanding any objection by the Contractor or any third party, the sum of..... being equal to 5% of the value of the said part of the Works or such part thereof as may be demanded.

(c) If the Design Guarantee Bond is not deposited with the Government in accordance with sub-clause (a) above, the Government shall have the right to claim from the Performance Bond the sum of Ringgit (RM...) being equal to 5% of the value of the said part of the Works or such part thereof as may be demanded

(d) If a payment is made to Government pursuant to clause (b), the Contractor shall ensure that further security in the form of an additional Design Guarantee Bond for an amount no less than the amount so paid to Government shall be issued to Government prior to or upon the date of such payment. If any of the issued Design Guarantee Bond were to expire prior to the validity period, a replacement Design Guarantee Bond shall be issued to Government on or prior to the date of expiry of the first mentioned Design Guarantee Bond in an amount not less than the amount of that Design Guarantee Bond.

23.0 EMPLOYMENT OF WORKMEN

23.1 Workmen

(a) The Contractor shall employ, in the execution of this Contract, only Malaysian citizens as workmen.

(b) If in any particular trade or skill required to complete the Works, the Contractor can show to the satisfaction of the S.O. that Malaysian citizens are not available, then the Contractor may employ non-Malaysian citizens subject to the approval of the Government.

(c) The Contractor shall on the commencement of the Works furnish to the Jabatan Tenaga Kerja of the State in which this Contract is performed all particulars connected with this Contract and such returns as may be called for from time to time in respect of labour employed by him on for the execution of this Contract, in accordance with the requirements of the Employment Act 1955, Employment (Restriction) Act 1968, and Internal Security (Registration of Labour) Regulation 1960 or any subsequent modification or re-enactment thereof.

(d) The Contractor shall maintain on the Site at all times during the progress of the Works an up to date register containing particulars of all workers employed by him.

(e) The Contractor shall cause his sub-contractors (including 'labour only' sub-contractors) and Nominated Sub-Contractors to comply with the provisions of this clause.

23.2 Compliance with Employment Act 1955, *etc.*

In the employment of workmen for the execution of this Contract, the Contractor shall comply, and shall cause his sub-contractors (including "labour only" sub-contractors) and Nominated Sub-Contractors to comply with all the requirements of the Employment Act 1955, Employment (Restriction) Act 1968, Employee's Provident Fund Act 1951, the Industrial Relations Act 1967 and any other law relating to the employment of workmen, or any subsequent modification or re-enactment thereof. PROVIDED THAT the Contractor shall not be entitled to any claim for additional costs and payments whatsoever in respect of his compliance with this clause.

Dokumen Meja Terkawal

23.3 **Days and Hours of Working**

No work shall be done on:

(a) the weekly day of rest;

(b) any public holiday which is recognised in the state where this Contract is being carried out; or

(c) between the hours of six in the evening and six in the following morning;

without the written permission of the S.O. PROVIDED THAT when such written application of the Contractor is approved by the S.O., the Contractor shall comply fully with all the requirements of the Employment Ordinance 1955 in regard thereto or any subsequent modification or re-enactment thereof and shall bear any costs for compliance therewith, and any extra costs incurred by the Government in connection with the supervision of the Works.

23.4 **Wages Books and Time Sheets**

(a) The Contractor shall keep and shall cause his sub-contractors (including "labour only" sub-contractors) and Nominated Sub-Contractors to keep proper wages books and time sheets showing wages paid to and the time worked by all workmen employed by him and his sub-contractors as aforesaid in and for the performance of this Contract.

(b) The Contractor shall produce such wages books and time sheets on demand for inspection by any persons duly authorised by the S.O.

(c) The Contractor shall furnish to the S.O. or S.O.'s Representative such information relating to the wages and conditions of employment of such workmen as the S.O. may from time to time require.

23.5 **Default in Payment of Wages**

In the event of default in the payment of –

(a) any money in respect of wages; and/or

(b) payment in respect of Employees Provident Fund Contributions,

of any workmen employed by the Contractor or his sub-contractors (including "labour only" sub-contractors) and Nominated Sub-contractors in and for the performance of this Contract, which a claim has been filed with the Department of Labour, then the S.O. shall make payment to the Director General of Labour and/or Employees Provident Fund, as the case may be, out of any monies at any time due to the Contractor under this Contract and such payment shall be deemed to be a payment made to the Contractor by the Government under and by virtue of this Contract.

23.6 Discharge of Workmen

(a) The Contractor shall employ in and about the execution of the Works only such persons as are of good character, careful, skilled and experienced in their respective vocations and trades.

(b) The S.O. shall be at liberty to object to and require the Contractor to remove immediately from the Site any person employed by the Contractor in or about the execution of the Works who in the opinion of the S.O. misconducts himself or is incompetent or negligent in the proper performance of his duties. Such person shall not again be employed upon the Works without the prior written permission of the S.O.

Dokumen Meja Terkawal

(c) Any person so removed from the Works shall be replaced without delay by a substitute approved by the S.O. PROVIDED THAT the Contractor shall not be entitled to any claim for any expense whatsoever incurred by him in respect of any direction given by the S.O. under this clause.

24.0 VARIATIONS

24.1 The S.O. may issue instructions requiring a Variation in a form of a Variation Order. No variation required by the S.O. shall vitiate this Contract. Upon the issuance of such Variation Order, the Contractor shall forthwith comply with the Variation Order issued by the S.O.

24.2 The term 'Variation' means a change in the Contract Document which necessitates the alteration or modification of the design, quality or quantity of the Works as described by or referred to therein and affects the Contract Sum, including:

(a) the addition, omission or substitution of any work;

(b) the alteration of the kind or standard of any of the materials, goods to be used in the Works; or

(c) the removal from the Site of any work executed or materials or goods brought thereon by the Contractor for the purposes of the Works other than work, materials or goods which are not in accordance with this Contract.

24.3 Any variation made under this clause shall not relieve the Contractor from his obligations under clause 22.1(c).

25.0 VALUATION OF VARIATION

25.1 All variations instructed in writing by the S.O. in accordance with clause 24 hereof shall be measured and valued by the S.O. The valuation of Variations, unless previously or otherwise agreed, shall be made in accordance with the following rules:

(a) the rates in the Bills of Quantities after adjustment if necessary as provided in clauses 26.6 and 26.7 hereof, shall determine the valuation of work of similar character and executed under similar conditions as work priced therein;

(b) the said rates, where work is not of similar character or executed under similar conditions as aforesaid, shall be the basis of rates for the same, so far as may be reasonable, failing which a fair valuation thereof shall be made by the S.O.;

(c) the rates in the Bills of Quantities shall determine the valuation of items omitted, PROVIDED THAT if the omission substantially vary the conditions under which any remaining items of work are carried out, the rates of such remaining items shall be valued under rule (b);

25.2 Where work cannot properly be measured or valued, the S.O. may allow daywork price as specified in Appendix. Unless otherwise provided in the Bills of Quantities, the daywork prices for the purpose of this Contract shall be taken to mean the actual net cost to the Contractor of his materials, plant and labour for the work concerned. The Contractor shall be paid daywork prices, plus fifteen percent (15%), which shall include for the cost of all ordinary plant, tools, scaffolding, supervision and profit. PROVIDED ALWAYS that as a condition precedent to any right to any payment the Contractor shall produce vouchers, receipts and wage books specifying the time for labour and plant employed and materials used to the S.O. not exceeding seven (7) days after the work shall have been done.

Dokumen Meja Terkawal

25.3 The amount of variations shall be certified by the S.O. and added to or deducted from the Contract Sum as the case may be and the amount shall be adjusted accordingly.

26.0 BILL OF QUANTITIES

Basis of Contract Sum

26.1 The quality and quantity of the Works as set out in the Bills of Quantities shall be the basis of the Contract Sum. Any error in description or quantity or omission of Works from the Bills of Quantities shall not vitiate this Contract but shall be rectified and the amount in respect of such rectification shall be added to or deducted from the Contract Sum as the case may be.

26.2 The Government reserves the right to adjust the prices and rates in the Bills of Quantities submitted by the Contractor to ensure their reasonableness before acceptance of tender and the decision of the Government shall be final.

26.3 Any adjustment of the prices and/or rates in the Bills of Quantities required under clause 26. 2 and any arithmetical error or omission in the prices or rates and/or calculations of the Contractor in the Bills of Quantities shall before the signing of this Contract be so rectified and adjusted that when correctly calculated, the total amount in the Summary of the Bills of Quantities shall represent the same amount as the tender amount in the Form of Tender. The tender amount shown in the Form of Tender shall remain unaltered but the nett aggregate amount of the difference between the total adjusted amount in the Summary of the Bills of Quantities and the tender amount shown in the Form of Tender, whether a nett deduction or nett addition, shall be calculated as a percentage of the total adjusted amount shown in the Summary of the Bills of Quantities and all prices and/or rates throughout the Bills of Quantities shall be subject to such percentage discounts or premiums as the case may be. Provided always that Provisional and Prime Cost Sums shall be excluded from such calculation and shall not be subject to such percentage discount or premium.

Standard Method of Measurement

26.4 The Bills of Quantities, unless otherwise expressly stated in respect of any specified item or items, shall be deemed to have been prepared in accordance with the principles of the Standard Method of Measurement of Building Works as published by the Institution of Surveyors (Malaysia) or Civil Engineering Method of Measurement published by Institution of Civil Engineers (London) or Method of Measurement as set out in Bill of Quantities.

Provisional Quantities

26.5 Unless where the quantities of the Works or any part thereof are stated as 'provisional' in the Bills of Quantities such quantities are firm and the Works shall not be subject to re-measurement unless the Bills of Quantities are proven to be erroneous and shall be dealt with under clause 26.1.

26.6 Where the quantities of Works are stated as "provisional" in the Bills of Quantities, such quantities are the estimated quantities which shall not be taken as the actual and correct quantities of Works to be executed by the Contractor in the fulfilment of his obligations under the Contract. The amount to be paid to the Contractor in respect of such Works upon completion of this Contract shall be ascertained by remeasurement of the work as it is actually executed and valued in accordance with clause 25.1 hereof, after adjustment if necessary as provided in clause 25.3 hereof.

26.7 For the purpose of clause 26.6, the amount to be paid to the Contractor shall be set off against the amount for such work in the Bills of Quantities, and the balance shall be added to or deducted from the Contract Sum as the case may be.

Dokumen Meja Terkawal

27.0 MEASUREMENT OF WORKS

27.1 The S.O. shall, when he requires any part or parts of the Works to be measured or remeasured for the purposes of clauses of Variation under clause 24 and provisional quantities under clause 26.5, give reasonable notice to the Contractor who shall attend or send a qualified agent to assist the S.O. or S.O.'s Representative in making such measurement and shall furnish all particulars required by the S.O.. Should the Contractor fail to attend or neglect or omit to send such agent, then the measurement made by the S.O. or approved by him shall be taken to be the correct measurement of the work.

27.2 Upon the completion of the measurement pursuant to clause 27.1, the S.O. shall supply the Contractor with such measurement in respect of the said parts.

28.0 PAYMENT TO CONTRACTOR AND INTERIM CERTIFICATES

28.1 When the Contractor has executed work including delivery to or adjacent to the Works of any unfixed materials or goods intended for incorporation into the Works in accordance with the terms of this Contract and their total value of work thereof has reached the sum referred to in Appendix, the S.O. shall at that time make the first valuation of the same.

28.2 Thereafter, once (or more often at the discretion of the S.O.) during the course of each succeeding month the S.O. shall make a valuation of the works properly executed and of unfixed materials and goods delivered to or adjacent to the Site, provided the total value of work properly executed and the value of unfixed materials and goods as specified in clause 28.4 hereof, delivered to the Site intended for incorporation into the Works in each subsequent valuation shall not be less than the sum referred to in Appendix.

28.3 Within fourteen (14) days from the date of any such valuation being made and subject to the provision mentioned in clause 28.1, the S.O. shall issue an Interim Certificate stating the amount due to the Contractor from the Government. PROVIDED THAT the signing of this Contract shall not be a condition precedent for the issue of the first Interim Certificate (and no other) so long as the Contractor has returned the Letter of Acceptance of Tender duly signed and has deposited with the S.O. or the Government the relevant insurance policies under clauses 15 and 18 hereof.

28.4 The amount stated as due in an Interim Certificate shall, subject to any agreement between the Parties as to payment by stages, be the estimated total value of the work properly executed and up to ninety percent (90%) of the value of the unfixed materials and goods delivered to or adjacent to the Site intended for incorporation into the permanent Works up to and including the date the valuation was made, less any payment (including advance payment) previously made paid under this Contract. PROVIDED THAT such certificate shall only include the value of the said unfixed materials and goods as and from such time as they are reasonably and properly and not prematurely delivered to or adjacent to the Site and adequately protected against weather, damage or deterioration.

28.5 This clause shall not apply to any unfixed materials and goods which are supplied and delivered by Nominated Suppliers for which payment shall be made for the full value of the unfixed materials and goods.

28.6 Within a number of days as stated in Appendix (or if none stated then within thirty (30) days of the issue of any such Interim Certificate), the Government shall make a payment to the Contractor as follows:

(a) where the Performance Bond is in the form of a Banker's, Insurance or Finance Company Guarantee, payment shall be made on the amount certified as due to the Contractor in the said Interim Certificate; or

(b) where the Performance Bond is in the form of a Performance Guarantee Sum, payment of ninety percent (90%) on the amount certified as due to the Contractor shall be made

Dokumen Meja Terkawal

with the remaining ten percent (10%) being retained by the Government as a Performance Guarantee Sum. PROVIDED THAT when the sum retained is equivalent to five percent (5%) of the Contract Sum then in any subsequent Certificate, payment shall be made on the full amount certified as due to the Contractor.

29.0 ADJUSTMENT OF CONTRACT SUM

The amount to be added to or deducted from the Contract Sum in respect of expense or loss due to fees and charges in relation to the supply of water and electricity and permanent connections to water, electricity, telephone and sewerage mains under clause 6.2, variations under clause 24, rectification of errors in Bill of Quantities under clause 26.3, fluctuation of price under clause 30, payment of P.C. Sums and Provisional Sums under clause 34, opening up work for inspection and testing of materials or goods and executed work under clause 35.2, loss and expense under clause 44 and costs of disposal of fossils, *etc.* under clause 65 hereof, shall be certified by the S.O.

30.0 FLUCTUATION OF PRICE

In accordance with the Special Provisions to the Conditions of Contract for Fluctuation of Price as contained in Appendix (if applicable), the amount payable by the Government to the Contractor upon the issue by the S.O. of an Interim Certificate under clause 28 hereof shall be increased or decreased accordingly. The net total of any such increases or decreases shall be given effect to in determining the Contract Sum.

31.0 FINAL ACCOUNT AND PAYMENT CERTIFICATE

31.1 As soon as is practicable but not later than three (3) months after the issuance of the Certificate of Practical Completion, the Contractor shall submit full particulars complete with receipts, vouchers records that would substantiate the Contractor's claim under clause 44 together with any documents, supporting vouchers and any explanation and calculations including documents relating to the accounts of Nominated Sub-Contractors or Nominated Suppliers, which may be necessary to enable the Final Account to be prepared by the S.O. PROVIDED ALWAYS the Contractor had given the notice of claim in writing within the stipulated time or times in the said provisions.

31.2 If the Contractor fails to submit full particulars of all claims within the stipulated period, the S.O. shall forthwith make the assessment based on the available documents submitted by the Contractor for the purpose of the Final Account. The Government shall be discharged from all liabilities in connection with the claims.

31.3 Within three (3) months after the expiry of the Defects Liability Period for the whole of the Works or three (3) months after the issue of the Certificate of Completion of Making Good Defects under clause 48 hereof, whichever is the later, the S.O. shall issue the Final Certificate.

31.4 The Final Certificate shall be supported by documents, and full particulars complete with receipts, vouchers records showing the S.O.'s final valuation of Works and any amount determined in clause 31.1 in accordance with the terms of this Contract. After setting out or allowing for all payments or other expenditure of the Government or any permitted deductions made by the Government or the S.O. on its behalf, the Final Certificate shall state any final balance due from the Government to the Contractor or from the Contractor to the Government, as the case may be, which shall thereupon become the debt payable. Such certificate shall also take account of any outstanding permitted deductions not yet made by the Government under the terms of this Contract whether by way of liquidated damages or otherwise.

Dokumen Meja Terkawal

31.5 No final payment due to the Contractor under the Final Certificate, shall be made unless and until the Contractor shall have satisfied the S.O. by means of a Statutory Declaration made by or on behalf of the Contractor to the effect that the workmen who have been employed by the Contractor on the Works including workmen employed by sub-contractors, whether nominated or otherwise (including "labour only" sub-contractors) have received all wages due to them in connection with such employment, and that all dues or contributions under the Employment Act 1955, the Employee's Social Security Act 1969, the Employee's Provident Fund Act 1965 and any other laws relevant to the employment of workmen, have been paid.

32.0 EFFECT OF S.O.'S CERTIFICATES

No certificate of the S.O. under any provision of this Contract shall be considered as conclusive evidence as to the sufficiency of any work, materials or goods to which it relates, nor shall it relieve the Contractor from his liability to amend and make good all defects, imperfections, shrinkages, or any other faults whatsoever as provided by this Contract. In any case, no certificate of the S.O. shall be final and binding in any dispute between the Government and the Contractor if the dispute is brought whether before an arbitrator or in the Courts.

33.0 DEDUCTION FROM MONEY DUE TO CONTRACTOR

The Government or the S.O. on its behalf shall be entitled to deduct any money owing from the Contractor to the Government under this Contract from any sum which may become due or is payable by the Government to the Contractor under this Contract or any other contracts to which the Government and Contractor are Parties thereto. The S.O. in issuing any certificate under clauses 28 and 31, shall have regard to any such sum so chargeable against the Contractor, provided always that this provision shall not affect any other remedy to which the Government may be entitled for the recovery of such sums.

34.0 PRIME COST / PROVISIONAL SUMS

34.1 In respect of any and every Prime Cost or P.C. Sum provided in the Contract, the amount due to any Contractor shall be determined by deducting the said Prime Cost or P.C. Sum and the relevant profit and/or attendance charges from the Contract Sum and substituting for the same with the actual amount due to relevant Nominated Sub- Contractor or Nominated Supplier as valued in accordance with the relevant sub-contract and the sums due to any Contractor by way of profit and/or attendance charges at the rates or prices stipulated in the Contract Documents (if any).

34.2 The Provisional Sum may be expended at such times and in such amounts as the S.O. may direct. Such sum if not used either wholly or in part shall be deducted from the Contract Sum. The value of works which are executed by the Contractor in respect of Provisional Sums shall be ascertained in accordance with clause 25 hereof. The said value of such work executed by the Contractor shall be set off against all such Provisional Sums and the balance shall be added to or deducted from the Contract Sum as the case may be.

34.3 Any work to be executed, or materials or goods to be supplied for which Provisional Sums are provided in the Bills of Quantities may, if the S.O. so decides, be treated as P.C. Sum items and shall be dealt with in accordance with clause 34.1.

34.4 Where the Contractor in the ordinary course of his business directly carries out works for which P.C. Sums are provided in the Bills of Quantities and where such works are set out in Appendix hereto and the S.O. is prepared to accept tenders from the Contractor for such works the Contractor shall be permitted to tender for the same or any of them without prejudice to Government's right to reject the lowest or any tender. If the tender of the Contractor for any work

Dokumen Meja Terkawal

included in the P.C. Sum is accepted, such tender shall be held to include the profit and attendance charges, and the Contractor shall not be entitled to the profit and attendance charges as contained in the Bills of Quantities notwithstanding any provision to the contrary under clause 34.1.

35.0 MATERIALS, GOODS AND WORKMANSHIP

35.1 All materials, goods and workmanship shall be of the respective kinds and standards described in the Specification and of good quality and in accordance with the standard of the workmanship in the industry. The Contractor shall upon the request of the S.O. furnish him with the relevant certificates and/or vouchers to prove that the materials and goods comply with the Specification.

35.2 The Contractor shall, entirely at his own cost, provide samples of materials and goods for testing purposes. The Contractor shall, when instructed by the S.O. to open up for inspection any work covered up, or arrange for or carry out any test of any materials or goods (whether or not already incorporated in the Works) or of any executed work which the S.O. may in writing require and the cost of such opening up or testing (together with the cost of making good in consequence thereof) shall be added to the Contract Sum unless provided for in the Bills of Quantities by way of Provisional Sums or otherwise or unless the inspection or test shows that the work, materials or goods are not in accordance with this Contract.

35.3 The Contractor shall pay all duties and taxes which may be imposed by law, such as customs duties and sales tax, on all materials, goods and equipment, whether purchased or imported in the Contractor's name or his agent, which are incorporated in the Works or used directly in the construction, completion or maintenance of the Works.

35.4 Except where otherwise specified, the Contractor shall pay all tonnage and other royalties, rent fees and other payments or compensation (if any) for getting stone, sand, gravel, clay or other materials required for the Works.

36.0 INSPECTION AND TESTING OF MATERIALS, GOODS AND EQUIPMENT

36.1 Further to his the Contractor's obligations under clause 10, the Contractor shall submit to the S.O. for his approval, proposals for inspecting the design and setting out of the Works and testing the materials and workmanship to ensure that the Contractor's obligations under the Contract are fulfilled.

36.2 The Contractor shall carry out the inspection and tests approved under clause 36.5 or elsewhere in the Contract and such further tests as the S.O. may reasonably require, including to open up for inspection any work covered up or to carry out any test of any materials or goods (whether or not already incorporated in the Works or any executed Works).

36.3 The S.O may issue instructions to the Contractor to remove from the Site or rectify any work, goods which are not in accordance with this Contract at his own cost.

36.4 The Contractor shall, as may be required by the S.O. from time to time, provide such assistance, instruments, machines, labour and materials as are normally required for the purpose of examining, measuring and testing of any work, as well as and the quality, weight or quantity of the materials used, and shall supply samples of materials before incorporation in the Works for testing.

36.5 Unless the Contract otherwise provides, the cost of making any test shall be borne by the Contractor if such test is:

(a) proposed by the Contractor; or

Dokumen Meja Terkawal

(b) clearly intended by or provided for in the Contract.

36.6 Notwithstanding anything in clause 36.5, if the Contractor carries out any further test as required by the S.O. pursuant to clause 36.2 and the result of such test shows the workmanship or materials is not in accordance with the provisions of the Contract, then the cost of such test shall be borne by the Contractor. But if the result of such test shows the workmanship or materials comply with the provisions of the Contract, then the cost of such test shall be borne by the Government.

37.0 CONSTRUCTIONAL PLANT, EQUIPMENT, VEHICLES AND MACHINERIES

37.1 The Contractor shall pay all port dues including (but not by way of limitation) wharfage dues, pilotage fees, anchorage, berthage and mooring fees, quarantine dues, loading porterage and overtime fees for constructional plant, equipment, vehicles and machineries for use directly in connection with the construction, completion of the works brought into and despatched from Malaysia by the Contractor (or in his name by agents).

37.2 The Contractor shall furnish to the S.O. all such shipping documents, invoices and other documentation as may be required by the Customs Authorities in connection with the importation of goods, materials, constructional plant, equipment, vehicles and machineries.

37.3 In the case of constructional plant, equipment, vehicles, and machineries imported on the Contractor's behalf by importing agents and the like both the shipping documents and the invoices of the original suppliers or manufacturers must indicate clearly that the consignment is for the Contractor's account.

37.4 The procedure in respect of the requirements of the foregoing shall be determined by the Customs Authorities. The Contractor shall make written application to the S.O. and shall provide the relevant documentation of all constructional plant, equipment, vehicles and machineries to be imported into Malaysia not less than forty-five (45) days before the arrival of the said constructional plant, equipment, vehicles and machineries.

37.5 The Contractor shall pay all charges and other expenses in connection with the landing and shipment of all constructional plant materials and other things of whatsoever nature brought into or despatched from Malaysia for the purpose of the Contract.

37.6 The Contractor shall make his own arrangement in obtaining clearance through the Customs of constructional plant, equipment, vehicles and machineries. However, if required, the S.O.'s assistance may be sought.

37.7 Under this Contract, the Contractor shall be required to furnish all lists of constructional plant, equipment, vehicles and machineries to the S.O. whether the constructional plant, equipment, vehicles and machineries are hired or acquired.

38.0 POSSESSION OF SITE

38.1 No work under this Contract shall commence unless and until the Performance Bond stipulated under clause 13 and such insurance policy as specified under clauses 15 and 18 shall have been deposited with the Government, PROVIDED THAT for the purposes of this clause only (but for no other), if the Contractor shall produce to the Government the cover note of the said insurance policy and the receipt of premium paid, it shall be a sufficient discharge of his obligations under this clause.

38.2 Unless the Contract Documents shall otherwise provide, possession of the Site as complete as may reasonably be possible but not so as to constitute a tenancy, shall be given on or before the "Date for Possession" stated in the Letter of Acceptance to the Contractor who shall thereupon

Dokumen Meja Terkawal

and forthwith commence the Works (but subject to clause 38.1) and regularly and diligently proceed with and complete the Works on or before the Date for Completion as stated in Appendix.

38.3 The "Date for Completion" of the Works as referred to under clause 39 hereof shall be calculated from the said "Date for Possession". PROVIDED ALWAYS that the possession of Site may be given in section or in parts and any other restrictions upon possession of the Site shall be stated in the Appendix to these Conditions or in the Contract Documents.

38.4 In the event of any delay in giving possession of the Site from the "Date for Possession" as stated in Letter of Acceptance or delay in giving any section or part of the Site as provided in clause 38.3, the S.O. may issue instructions in regard to the revision of the "Date for Possession" and the "Date for Completion" shall be appropriately revised under clause 43.1(h) hereof, but the Contractor shall not be entitled to claim for any loss or damage caused by such delay in giving possession of the Site, nor shall he be entitled to terminate this Contract.

38.5 In the event that the giving of the possession of the whole Site is delayed beyond ninety (90) days of the "Date for Possession" stated in the Letter of Acceptance, the S.O. shall give written notice to the Contractor of the causes of such delay. Upon the receipt of the said written notice issued by the S.O., the Contractor may, inform the S.O. in writing of its decision within fourteen (14) days of receipt of the said notice either to:

(a) agree to proceed with the Works when the Site is subsequently made available, in which case clause 38.4 shall apply in particular, the Contractor shall not be entitled to claim for any loss or damage caused by such delay in giving possession of the Site, or

(b) terminate this Contract, without prejudice to any other rights or remedies that the Government and the Contractor may have as a result of the termination.

38.6 In the event that the giving of possession of any section or part of the Site (whether provided for in clause 38.3 or otherwise) is delayed beyond ninety (90) days from the Date of Possession stated in the Appendix or the date the Contractor is scheduled to commence work on that section or part of the Works in accordance with the approved programme of Works as referred to in clause 12 hereof as the case may be, then the S.O. shall give written notice to the Contractor of the causes of such delay. Upon receipt of the said written notice, the Contractor may inform the S.O. in writing, within fourteen (14) days of receipt of the said notice of its decision either to:

(a) agree to proceed with the Works when the section or part of the Site is subsequently made available, in which case sub-clause 38.5(a) above shall apply and in particular, the Contractor shall not be entitled to claim for any loss or damage caused by such delay as aforesaid; or

(b) request for S.O.'s instruction to omit the relevant section or part of the Works from the Contract. If the S.O. agrees to such request then the relevant section or part of the Works shall be duly omitted and deemed to be a variation to the Contract. Such variation shall not vitiate this Contract. If the S.O. does not agree to such request as aforesaid, then the Contractor shall be entitled to claim for any loss and/or expenses caused by and in respect of such delay beyond ninety (90) days as aforesaid.

39.0 COMPLETION OF WORKS

39.1 Subject to clauses 38.3 and 41, the Contractor shall complete the whole of the Works on or before the "Date for Completion" as stated in the Appendix or such extended time as may be allowed under clause 43 hereof.

39.2 If the Contractor considers that the works have achieved practical completion, the Contractor shall notify the S.O. in writing to that effect.

Dokumen Meja Terkawal

39.3 Within 14 days of receipt of such notice, the S.O. shall carry out testing/ inspection of the Works. Pursuant to such inspection/testing, the S.O. shall –

(a) issue the Certificate of Practical Completion to the Contractor if in his opinion the whole Works have reached Practical Completion and have satisfactorily passed any inspection/test carried out by the S.O. The date of such completion shall be certified by the S.O. and such date shall be the date of the commencement of the Defects Liability Period as provided in clause 48 hereof; or

(b) give instruction to the Contractor specifying all defective works which are required to be completed by the Contractor before the issuance of the Certificate of Practical Completion.

39.4 If the S.O. has given instruction pursuant to clause 39.3(b), no Certificate of Practical Completion shall be issued to the Contractor until the Contractor has effectively carried out the remedial work within reasonable period to the satisfaction of the S.O.

39.5 The Works shall not be regarded as practically complete unless it has fulfilled the following:

(a) the Works have been completed in accordance with the terms and conditions of this Contract;

(b) the Government can have full, proper and beneficial use of the Works for their intended purpose, notwithstanding that there may be works of a very minor defects PROVIDED THAT such works do not prevent or diminish the full, proper and beneficial use as aforesaid;

(c) the Works have passed any commissioning tests required in the Contract Document;

(d) the Works shall be made available to the Government in a condition fit for occupation; and

(e) all the essential services, including access roads, landscape, car parks, drains, sanitary, water and electricity installation, fire hydrant, sewerage and refuse disposal equipment and fire lifts specified in this Contract.

39.6 When the whole of the Works have reached practical completion to the satisfaction of the S.O., the date of such completion shall be certified by him and such date shall be the date of the commencement of the Defects Liability Period as provided in clause 48 hereof.

40.0 DAMAGES FOR NON-COMPLETION

40.1 If the Contractor fails to complete the Works by the Date for Completion or within any extended time granted pursuant to clause 43, the S.O. shall forthwith issue a Certificate of Non-Completion to the Contractor.

40.2 Without prejudice to the Government's right to terminate this Contract, when the S.O. issues the Certificate of Non-Completion, the Government shall be entitled to recover from the Contractor, Liquidated and Ascertained Damages calculated at the rate stated in Appendix 1 from the period of the issuance of the Certificate of Non-Completion to the date of issuance of Certificate of Practical Completion or the date of termination of this Contract. The S.O. may deduct such Liquidated and Ascertained Damages from any money due or to become due to the Contractor, failing which such damages shall be recovered from the Performance Bond or as a debt due from the Contractor. The S.O. shall inform the Contractor in writing of such deduction.

40.3 The Liquidated and Ascertained Damages stated in Appendix 1 shall be deemed to be a reasonable amount of loss which the Government will suffer in the event that the Contractor is in

Dokumen Meja Terkawal

breach of this clause. The Contractor by entering into this Contract agrees to pay to the Government the said amount(s) if the same become due without the need of the Government to prove his actual damage or loss.

40.4 The payment or deduction of such Liquidated and Ascertained Damages shall not relieve the Contractor from his obligation to complete the Works or from any of its obligations and liabilities under the Contract.

41.0 SECTIONAL COMPLETION

41.1 Where different completion dates for different sections or parts of the Works are stated and identified in Appendix or elsewhere in the Contract Documents and different and separate Liquidated and Ascertained Damages are provided for each section or part of the Works, the provisions of this Contract in regard to:

(a) Certificate of Practical Completion;

(b) Delay and Extension of Time;

(c) Liquidated Ascertained Damages; and

(d) Defects Liability Period,

but not Insurance of the Works under clause 18, Performance Bond under clause 13 and final payment on the Final Certificate under clause 31 hereof shall, in the absence of any express provision to the contrary elsewhere in the Contract Documents apply as if each such section or part was the subject of a separate and distinct contract between the Government and the Contractor.

41.2 For the avoidance of doubt, nothing contained in clause 41.1 shall entitle the Contractor to the release of the whole or any part of the Performance Bond or Performance Guarantee Sum deposited by him. The Performance Bond or Performance Guarantee Sum shall be released or be refunded only upon the issue of the Certificate of Making Good Defects of the whole of the Works or in respect of the last section of the Works, as the case may be.

42.0 PARTIAL OCCUPATION/TAKING OVER BY GOVERNMENT

42.1 If at any time before the whole of the Works have reached practical completion pursuant to clause 39, the Government with the consent of the Contractor (which consent shall not be unreasonably withheld) shall take possession of and occupy any part or parts of the same (any such part being hereinafter in this Clause referred to as 'the relevant part'), then notwithstanding anything expressed or implied elsewhere in this Contract.

Certificate of Partial Occupation

(a) within seven (7) days from the date on which the Government shall have taken possession of the relevant part, the S.O. shall issue a Certificate of Partial Occupation in respect of the relevant part stating the estimated value of the said relevant part, and for all the purposes of this Clause (but for no other) the value so stated shall be deemed to be the total value of the said relevant part;

Defects Liability Period

(b) for the purposes of clauses 39 and 48 hereof, the relevant part shall be deemed to have reached practical completion and the Defects Liability Period in respect of the relevant

Dokumen Meja Terkawal

part shall be deemed to have commenced on the date on which the Government shall have taken possession and occupied thereof;

Certificate of Making Good Defects

(c) at the end of the Defects Liability Period of the relevant part and if in the opinion of the S.O. any defect, imperfection, shrinkage or any other fault whatsoever in respect of the relevant part which he may have required to be made good under clause 48.1, shall have been made good by the Contractor, the S.O. shall issue a certificate to that effect;

Reduction of Liquidated Ascertained Damages

(d) if, before the time of completion of the whole of the Works or, if applicable any section, a Certificate of Practical Completion has been issued for any part of the Works or of a section, the rate of the liquidated and ascertained damages for delay in completion of the remainder of the Works or of that section shall, for any period of delay after the date stated in such Certificate of Practical Completion, be reduced in the proportion which the value of the part so certified bears to the value of the whole of the Works or section, as applicable;

Insurance of the Works

(e) notwithstanding the partial occupation by the Government of the relevant part the Contractor shall insure and keep insured the Works in the manner as stipulated under clause 18 and the Contractor shall give notice to the insurer of such partial occupation; and

Performance Bond Not Affected

(f) it is expressly agreed that nothing contained in the preceding paragraphs shall entitle the Contractor to the release of the Performance Bond or any part thereof deposited by him under clause 13 hereof, the intention being that the said Performance Bond or any part thereof shall be released or refunded only upon the completion of making good all defects, imperfections, shrinkages or other faults which may appear during the Defects Liability Period and upon the giving of the Certificate of Completion of Making Good Defects for the whole of the Works under clause 48 hereof.

43.0 DELAY AND EXTENSION OF TIME

43.1 Upon it becoming reasonably apparent that the progress of the Works is delayed, the Contractor shall forthwith give written notice to the S.O as to the causes of delay and relevant information with supporting documents enabling the said officer to form an opinion as to the cause and calculation of the length of delay. If in the opinion of the S.O the completion of the Works is likely to be delayed or has been delayed beyond the Date for Completion stated in Appendix 1 or beyond any extended Date for Completion previously fixed under this Clause due to any or more of the following events:

(a) force majeure as provided under clause 58;

(b) exceptionally inclement weather;

(c) suspension of Works under clause 50;

(d) directions given by the S.O., consequential upon disputes with neighbouring owners provided the same is not due to any act, negligence or default of the Contractor or any sub-contractor, nominated or otherwise;

Dokumen Meja Terkawal

(e) S.O.'s instructions issued under clause 5 hereof, PROVIDED THAT such instructions are not issued due to any act, negligence, default or breach of this Contract by the Contractor or any sub-contractor, nominated or otherwise;

(f) the Contractor not having received in due time instructions in regard to the nomination of sub-contractors and/or suppliers provided in this Contract, necessary instructions, drawings or levels for the execution of the Works from the S.O. due to any negligence or default of the S.O. PROVIDED THAT the Contractor shall have specifically applied in writing on a date which having regard to the Date for Completion stated in Appendix or to any extension of time then fixed under this clause, was neither unreasonably distant from nor unreasonably close to the date on which it was necessary for him to receive the same;

(g) delay in giving possession of the Site as provided under clause 38.4 hereof other than claim in effecting insurance and Performance Bond;

(h) delay on the part of artists, tradesmen or others engaged by the Government in executing work not forming part of this Contract;

(i) the Contractor's inability for reason beyond his control and which he could not reasonably have foreseen at the date of closing of tender of this Contract to secure such goods, materials and/or services as are essential to the proper carrying out of the Works; or

(j) delay on the part of the Nominated Sub-contractors and/or Nominated Suppliers to perform their works, due to reasons as stated above in sub-clauses (a) to (i),

then the S.O. may if he is of the opinion that the extension of time should be granted, so soon as he is able to estimate the length of the delay beyond the date or time aforesaid issue a Certificate of Delay and Extension of Time giving a fair reasonable extension of time for completion of the Works.

PROVIDED THAT all such delays are not due to any act, negligence, default or breach of contract by the Nominated Sub-contractor and/or Nominated Supplier and/or the Contractor, or any of the servants or agents of such Nominated Sub-contractor or Nominated Supplier or the Contractor.

PROVIDED ALWAYS that the Contractor has taken all reasonable steps to avoid or reduce such delay and shall do all that may reasonably be required to the satisfaction of the S.O. to proceed with the Works.

PROVIDED FURTHER that the Contractor shall not be entitled to any extension of time where the instructions or acts of the S.O. are necessitated by or intended to remedy any default of or breach of contract by the Contractor.

44.0 CLAIMS FOR LOSS AND EXPENSE

44.1 If at any time during the regular progress of the Works or any part thereof has been materially affected by reason of delays as stated under clause 43.1 (c), (d), (e), (f) and (h), and the Contractor has incurred direct loss and/or expense beyond that reasonably contemplated and for which the Contractor would not be reimbursed by a payment made under any other provision in this Contract, then the Contractor shall within thirty (30) days of the occurrence of such event or circumstances or instructions give notice in writing to the S.O. of his intention to claim for such

Dokumen Meja Terkawal

direct loss or expense together with an estimate of the amount of such loss and/or expense, subject always to clause 44.2 hereof.

44.2 As soon as is practicable but not later than ninety (90) days after practical completion of the Works, the Contractor shall submit full particulars of all claims for direct loss or expense under clause 44.1 together with all supporting documents, vouchers, explanations and calculations which may be necessary to enable the direct loss or expense to be ascertained by the S.O.. The amount of such direct loss or expense ascertained by the S.O. shall be added to the Contract Sum.

44.3 If the Contractor fails to comply with clauses 44.1 and 44.2, he shall not be entitled to such claim and the Government shall be discharged from all liability in connection with the claim.

45.0 INVESTIGATION BY THE GOVERNMENT AND OTHER PERSONS IN CASE OF ACCIDENT, FAILURE OR OTHER EVENT

Where the Government, its employee or any person or body appointed or authorised by it carries out any investigation in relation to any accident, failure or other event which has occurred to, in or in connection with the Works or any part thereof for the purpose of determining the cause or reason for the said accident, failure or event, the Contractor shall render all such necessary assistance and facilities as may be required by the Government, its employee or such person or body, including the giving of access to all specifications, designs, records and other available information relating to the Works.

46.0 ACCESS FOR WORKS, *ETC.*

46.1 Access for S.O.

(a) The S.O. and any person authorised by the S.O. shall at all times have access to the Works and to the factories, workshops or other places of the Contractor or of any sub-contractor or supplier where any equipment, materials, goods or work are being manufactured, fabricated, assembled, prepared or stored for the Contract.

(b) Where any such equipment, materials, goods or work are being manufactured, fabricated, assembled, prepared or stored in the factories, workshops or other places of a sub-contractor or supplier, the Contractor shall by a term in the sub-contract secure a similar right of access to those factories, workshops or other places for the S.O. and any person authorised by the S.O., and shall take reasonable steps required of him by the S.O. to enforce or assist in enforcing such right.

(c) Any person so removed from the Works shall be replaced without delay by a substitute approved by the S.O.; PROVIDED THAT the Contractor shall not be entitled to any claim for any expense whatsoever incurred by him in respect of any direction given by the S.O. under this Clause.

46.2 Access for Other Contractors and Workmen

The Contractor shall in accordance with the requirements of the S.O. afford all reasonable access and facilities to any other person engaged by the Government and their workmen and of any other constituted authorities for the purposes of executing any work on or near the Site.

Dokumen Meja Terkawal

47.0 SUB-CONTRACT OR ASSIGNMENT

47.1 The Contractor shall not without the prior written consent of the S.O. (which consent shall not be unreasonably delayed or withheld) sub- contract the design for any portion of the Works under clause 22 of this Contract. Where the S.O. consents to any sub-contract under this clause, such consent shall not in any way absolve the obligations of the Contractor under clause 10.

47.2 The Contractor shall not sub- contract the whole or any substantial part of the Works without the prior written consent of the S.O. (which consent shall not be unreasonably delayed or withheld). Any such consent, if given, shall not relieve the Contractor from any liability or obligation under this Contract and he shall be responsible for the due observance by such sub-contractors, of all the terms, stipulations and conditions under this Contract.

47.3 Notwithstanding any sub-contract made pursuant to clauses 47.1 and 47.2, the Contractor shall be fully responsible for the acts, defaults or neglects of any sub-contractor, including 'labour only' sub-contractors, his agents, servants or workmen as if they were the acts, defaults or neglects of the Contractor, his agents, servants or workmen; PROVIDED THAT the provision of labour on a piecework basis shall not be deemed to be a sub-contract under this clause.

47.4 It shall be a condition in any sub-contract which has been consented to by the Government that upon termination of the Contractor's employment under the Contract, the employment of the sub-contractor under the sub-contract shall terminate immediately. No claim whatsoever shall be made by the Contractor and/or sub-contractor against the Government for any work done or materials or goods supplied.

47.5 If the Contractor sub-contracts the Works, in whole or in part, to any person without getting prior written consent of the S.O. as provided under this clause, the S.O. shall have the right to instruct the Contractor to forthwith terminate such sub-contract and the Contractor shall be liable for all costs and expense relating to such termination.

47.6 The Contractor shall not assign the Contract or any part thereof, or any benefit or interest therein or thereunder otherwise than by way of assignment in favour of the Contractor's banker or any financial institution or Corporation of any monies due or to become due under this Contract without prior written consent of the S.O.

48.0 DEFECTS AFTER COMPLETION

48.1 Completion of Outstanding Work and Remedying Defects

(a) At any time during the Defects Liability Period as stated in Appendix hereto (or if none stated the period is twelve (12) months from the date of practical completion of the Works), any defect, imperfection, shrinkage or any other fault whatsoever which may appear and which are due to materials or goods or workmanship not in accordance with this Contract, the S.O. shall issue written instruction to the Contractor to make good such defects, imperfections, shrinkages or any other fault whatsoever at the Contractor's own cost. The Contractor shall complete all such works with due expedition or within such time as may be specified by the S.O.

(b) Without prejudice to sub-clause (a), any defect, imperfection, shrinkage or any other fault whatsoever which may appear during the Defects Liability Period to be made good by the Contractor, shall be specified by the S.O. in the Schedule of Defects which he shall deliver to the Contractor not later than fourteen (14) days after the expiration of the Defects Liability Period. The defects, imperfections, shrinkages or any other fault whatsoever specified in the Schedule of Defects shall be made good by the Contractor at his own costs and to be completed within a reasonable time but in any case not later than three (3) months after the receipt of the said Schedule. PROVIDED THAT the S.O.

Dokumen Meja Terkawal

shall not be allowed to issue any further instruction requiring the Contractor to make good of any defect, imperfection, shrinkage or any other fault whatsoever after the issuance of the said Schedule of Defects or after fourteen (14) days from the expiration of the said Defects Liability Period, whichever is the later.

48.2 **Default in Remedying Defects**

If the Contractor shall fail to comply with either clause 48.1(a) and/or 48.1(b) within the time so specified, the materials or works so affected may be made good in such manner as the S.O. may think fit, in which case the costs incurred including On-Cost Charges (calculated by applying the Percentage of On-Cost Charges stated in Appendix to the costs incurred), shall be deducted from any money due or to become due, to the Contractor under this Contract and failing which such costs shall be recovered from the Performance Bond or as a debt due from the Contractor.

48.3 **Diminution in Value of Works**

If any defect, imperfection, shrinkage or any other fault whatsoever is such that, in the opinion of the S.O., it shall be impracticable or inconvenient to the Government to have the Contractor to remedy the same, the S.O. shall ascertain the diminution in the value of the Works due to the existence of such defects, imperfections, shrinkages or any other fault whatsoever. The amount of such diminution shall be recoverable by the Government from the Contractor as a debt due under the Contract and failing which such diminution shall be recovered from the Performance Bond.

48.4 **Certificate of Completion of Making Good Defects**

When in the opinion of the S.O. the Contractor has made good the defects, imperfections, shrinkages or any other fault whatsoever which he is required to make good under clauses 48.1(a) or (b), or both, the S.O. shall issue a certificate to that effect, and the date specified in such certificate shall be the date on which the Contractor has completed making good such defects, imperfections, shrinkages or any other fault whatsoever. The said Certificate shall be referred to as the "Certificate of Completion of Making Good Defects".

49.0 UNFULFILLED OBLIGATIONS

Notwithstanding the issue of the Certificate of Completion of Making Good Defects under clause 48.4 hereof the Contractor and the Government shall remain liable for the fulfilment of any obligation incurred under the provisions of the Contract, prior to the issue of the said certificate, which remains unfulfilled at the time such certificate is issued, and for the purpose of determining the nature and extent of any such obligation, the Contract shall be deemed to remain in force between the Parties hereto.

50.0 SUSPENSION OF WORKS

50.1 **Suspension and Resumption of Works**

(a) The S.O. may at any time instruct the Contractor to suspend part or all of the Works.

(b) Upon receipt of such written instruction, the Contractor shall suspend part or all of the Works for such time and in such manner as specified in the instruction and shall duly protect, store and secure the Works or such part of the Works against any deterioration, loss or damage.

(c) During the suspension period, the Contractor shall continue to perform its obligations under this Contract, which are not affected by the instruction to suspend, including the obligation to effect and maintain insurances and Performance Bond.

Dokumen Meja Terkawal

(d) The S.O. may instruct the Contractor to resume the Works at any time thereafter. Upon receipt of such instruction the Contractor shall resume the Works and the Parties shall jointly examine the Works affected by the suspension. The Contractor shall make good any deterioration or defect in or loss of the Works which has occurred during the suspension. The Contractor shall also take all necessary actions to mitigate the expenses incurred

50.2 **Extension of Time**

If the Contractor suffers delay and/or incurs expenses in complying with the instruction under clause 50.1(a), and in resumption of the Works, and if such delay and/or expenses was not foreseeable by the Contractor, the Contractor shall give notice for extension of time under clause 43 and the provisions thereof shall apply accordingly. PROVIDED THAT the Contractor shall not be entitled to such extension if the suspension is due to a cause attributable to the Contractor and he shall not be entitled to payment of loss and expense if he –

(a) fails to take measures specified in clause 50.1(b); and

(b) fails to take all necessary action to mitigate the expenses incurred.

In the event such suspension shall continue for a period exceeding twelve (12) months, the Parties shall then discuss whether to mutually terminate the Contract or suspend the Works for a further period.

50.3 **Consequences of Mutual Termination**

(a) If the Contract is mutually terminated under this clause-

(i) clause 51.1(c)(i) shall be applicable; and

(ii) payment obligations including all costs and expenditure incurred by the Government and the Contractor shall be ascertained in accordance with clause 54.

51.0 EVENTS AND CONSEQUENCES OF DEFAULT BY THE CONTRACTOR

51.1 **Default of Obligations**

(a) **Events of Default**

In the event the Contractor -

(i) fails to commence works at the Site within two (2) weeks after the Date for Possession;

(ii) suspends or abandons the carrying out of the Works or any part thereof for a continuous period of ..... (....) days;

(iii) fails to proceed regularly and diligently with the performance of his obligations under the Contract;

(iv) fails to execute the Works in accordance with the Contract;

(v) persistently neglects to carry out his obligations under the Contract;

Dokumen Meja Terkawal

(vi) refuses or persistently neglects to comply with a written notice from the S.O. in relation to any defective work or equipment, materials or goods which are defective or do not meet the requirements of the Contract;

(vii) fails to comply with the provisions of clause 47; or

(viii) fails to comply with any terms and conditions of this Contract,

then the Government shall give written notice to the Contractor specifying the default, and requiring the Contractor to remedy such default within fourteen (14) days of the receipt of the default notice or any period determined by the Government.

(b) **Termination**

If the Contractor fails to remedy the breach within such period, the Government shall have the right to forthwith terminate this Contract by giving a written notice to that effect

(c) **Consequences of Termination**

If this Agreement is terminated under clause 51.1(b) -

(i) the Contractor shall -

(A) forthwith cease all operations of the Works;

(B) carry out any protection works so as to secure the Site, equipment, goods, materials therein against any deterioration, loss or damage and to do all things necessary so as to leave the Site in a clean and tidy condition;

(C) remove its personnel and workmen from the Site;

(D) vacate the Site within the time stipulated by the S.O., remove all temporary buildings, plant, tools, equipment, goods and unfixed materials which have not been paid by the Government, as specified by the S.O. Failing which, the Government may (but without being responsible for any loss or damage) remove and sell any such property belonging to the Contractor, holding the proceeds, less all cost incurred, to the credit of the Contractor;

(E) either -

(aa) terminate all third party contracts entered into by the Contractor for the purposes of this Contract;

(bb) assign to the Government, if so required by the S.O., at no cost or expense to the Government, the benefit of any agreement for the supply of materials or goods and/or for the execution of any work or services for the purposes of this Contract; or

(cc) allow such third party to enter into a contract with the Government or any person deemed necessary by the Government for the purpose of completing the Works;

PROVIDED THAT the Government shall not be obliged to pay any third party for any materials or goods delivered or any work executed or services for the purposes of this Contract (whether before or after the date of termination) for which the Government has paid but the Contractor has failed to make payment to the third party;

Dokumen Meja Terkawal

(F) at no cost to the Government, hand over to the Government all plans, designs, specification and other relevant documents relating to the Works;

(G) pay to the Government for any losses and damages as a result of termination of this Contract in the manner provided under clause 56; and

(H) not be released from any of its obligations under the Contract.

(ii) the Government shall –

(A) call upon the Performance Bond or forfeit the Performance Guarantee Sum;

(B) enter and repossess the Site;

(C) be entitled to carry out and complete the Works on its own or employ any other person to carry out and complete the Works; and

(D) be entitled to claim against the Contractor for any losses, costs, expenses and damages suffered as a result of termination of this Contract in the manner provided under clause 56.

(iii) for the avoidance of doubt, the Parties hereby agree that the Contractor shall not be entitled to any form of losses including loss of profit, damages, claims or whatsoever upon termination of this Contract under this clause.

51.2 **General Default**

(a) **Events of Default**

If at any time during the Contract Period-

(i) the Contractor becomes bankrupt;

(ii) the Contractor becomes insolvent or compounds with or enters into an arrangements or compositions with its creditors;

(iii) an order is made or resolution is effectively passed for the winding-up of the Contractor (except for the purpose of restructuring or amalgamation with the written consent of the Government, which consent shall not be unreasonably withheld);

(iv) a provisional liquidator, receiver or manager of its business or undertaking duly appointed, or possession taken by or on behalf of creditors or debenture holders secured by a floating charge of any property comprised in or subject of the floating charge; or

(v) execution is levied against a substantial portion of the Contractor's assets,

then the Government shall have the right to terminate this Contract forthwith by giving notice to that effect.

Dokumen Meja Terkawal

(b) **Consequences of Termination**

(i) In the event the termination of this Contract under clause 51.2 takes place, clauses 51.1(c)(i) and 51.1(c)(ii) shall apply.

(ii) For the avoidance of doubt, the Parties hereby agree that the Contractor shall not be entitled to any form of losses including loss of profit, damages, claims or whatsoever upon termination of this Contract under this clause.

52.0 TERMINATION ON NATIONAL INTEREST

52.1 Termination

(a) Notwithstanding any provision of this Contract, the Government may terminate this Contract by giving not less than thirty (30) days written notice to that effect to the Contractor (without any obligation to give any reason thereof) if the Government considers that such termination is necessary for national interest, national policy or national security.

(b) For the purpose of this clause, what constitutes "national interest", "national policy" and "national security", shall be solely made and determined by the Government and such determination shall for all intent and purposes be final and conclusive and shall not be open to any challenge whatsoever.

52.2 Consequences of Termination

Upon such termination of this Contract under clause 52.1-

(a) payment obligations including all costs and expenditure incurred by the Government and the Contractor shall be ascertained in accordance with clause 54; and

(b) clause 51.1(c)(i) and clause 51.1(c)(ii)(B) and (C) shall apply.

53.0 TERMINATION ON CORRUPTION, UNLAWFUL OR ILLEGAL ACTIVITIES

53.1 Termination

Without prejudice to any other rights of the Government, if the Company, its personnel, servants or employees is convicted by a court of law for corruption or unlawful or illegal activities in relation to this Contract or any other agreement that the Contractor may have with the Government, the Government shall be entitled to terminate this Contract at any time, by giving immediate written notice to that effect to the Contractor.

53.2 Consequences of Termination

Upon such termination under clause 53.1 –

(a) the Government shall be entitled to all losses, costs, damages and expenses including any incidental costs and expenses incurred by the Government arising from such termination;

(b) clause 51.1(c)(i) and (ii) shall apply; and

Dokumen Meja Terkawal

(c) for the avoidance of doubt, the Parties hereby agree that the Contractor shall not be entitled to any other form of losses including loss of profit, damages, claims or whatsoever upon termination of this Contract.

54.0 PAYMENTS UPON SUSPENSION AND TERMINATION ON NATIONAL INTEREST

54.1 If this Contract is terminated under clause 50 or clause 52, the amount to be paid (in so far as such amounts or items have not already been covered by payments on account made to the Contractor) shall be the following:

(a) the value of all work carried out up to the date of termination;

(b) the amounts payable in respect of any preliminary items so far as the Work or service comprised therein has been carried out or performed and a proper proportion of any such items which have been partially carried out or performed;

(c) the cost of materials or goods reasonably ordered for the Works which have been delivered to the Contractor or of which the Contractor is legally liable to accept delivery (such materials or goods becoming the property of the Government upon such payment being made to the Contractor);

(d) a sum being the amount of any expenditure reasonably incurred by the Contractor in so far as such expenditure has not been recovered by any other payments referred to in this sub-clause; and

(e) the reasonable cost of any protection works and removal of equipment and site facilities pursuant to termination as provided under this Contract,

PROVIDED THAT such amount to be paid by the Government shall be confined only to those items as are clearly and expressly stated in sub-clauses (a)-(e) above.

54.2 For the avoidance of doubt, the Parties hereby agree that the Contractor shall not be entitled to any other form of losses including loss of profit, damages, claims or whatsoever other than stipulated under clause 54.1(a)-(e). The Parties further agree that the amount agreed above by the Government shall constitute as a full and final settlement between the Parties.

54.3 Upon termination of this Contract under clause 50 and clause 52, a final account of this Contract shall be prepared and issued by the S.O.

55.0 EVENTS AND CONSEQUENCES OF DEFAULT BY THE GOVERNMENT

Default of Obligations

(a) **Events of Default**

If the Government without any reasonable cause fails to perform of fulfil any of its obligations which adversely affects the Works,

then the Contractor may issue a notice specifying the default by the Government and requiring the Government to remedy the same within the period specified therein taking into account the nature of the remedy to be carried out by the Government or such other period as may be agreed by both Parties from the date of receipt of such notice.

(b) **Termination**

Dokumen Meja Terkawal

If the Government fails to remedy the default period specified in such notice issued under Clause 55 (a) within the stipulated period time therein, the Contractor shall have the right to forthwith terminate this Contract by giving a written notice to that effect.

(c) **Consequences of Termination**

If this Contract is terminated under Clause 55 (b)

(i) the Government shall pay to the Contractor –

(a) the value of the Works carried out up to the date of termination;

(b) the amounts payable in respect of any preliminary items so far as the Work or service comprised therein has been carried out or performed and a proper proportion of any such items which have been partially carried out or performed;

(c) the cost of materials or goods reasonably ordered for the Works which have been delivered to the Contractor or of which the Contractor is legally liable to accept delivery (such materials or goods becoming the property of the Government upon such payment being made to the Contractor); and

(d) a sum being the amount of any expenditure reasonably incurred by the Contractor in so far as such expenditure has not been recovered by any other payments referred to in this sub-clause.

(ii) For the avoidance of doubt, the Parties hereby agree that the Contractor shall not be entitled to any other form of losses including loss of profit, damages, claims or whatsoever upon termination of this Contract.

56.0 CERTIFICATE OF TERMINATION COSTS

56.1 As soon as the arrangements for the completion of the Works made by the Government enable the S.O. to make a reasonably accurate assessment of the ultimate cost to the Government of completing the Works following the termination of the Contractor's employment and the engagement of other contractors or persons, and the amount of direct loss and/or damage caused to the Government due to the termination has been ascertained by the S.O., then the S.O. may issue a certificate (hereinafter referred to as the "Certificate of Termination Costs") stating the Completion Cost (hereinafter defined) and the Final Contract Sum (hereinafter defined).

56.2 The Completion Cost comprises the following sums, costs or expenditure:

(a) the sums previously paid to the Contractor by the Government;

(b) the sums paid or payable to other contractors or persons engaged by the Government to complete the Works;

(c) any sums paid to sub-contractors or suppliers under clause 61;

(d) any costs or expenditure incurred or to be incurred including On-Cost Charges incurred by the Government in completing the Works; and

(e) the amount of direct loss and/or damage caused to the Government due to the termination.

56.3 The Final Contract Sum comprises of the following amounts or sums:

Dokumen Meja Terkawal

(a) the amount which would have been payable under the Contract on completion in accordance with the Contract, allowing any variations or other matters which would have resulted in an adjustment of the original Contract Sum; and

(b) any other sums which the Government might be entitled under the terms of the Contract to deduct from the original Contract Sum,

had the Contractor's employment not been terminated.

56.4 The Certificate of Termination Costs shall state the difference between the Final Contract Sum and the Completion Cost. If the Final Contract Sum is less than the Completion Cost, the difference shall be a debt payable by the Contractor to the Government and if greater the difference shall be a debt payable by the Government to the Contractor.

56.5 The Certificate of Termination Costs shall be binding and conclusive on the Contractor as to the amount of such loss or damage specified therein.

56.6 In the event the completion of the Works being undertaken departmentally, allowance shall be made, when ascertaining the amount to be certified as costs and expense incurred by the Government, for cost of supervision, interest and depreciation on plant and all other usual overhead charges and profit as would be incurred if the Works were completed by other contractors or persons.

57.0 SURVIVING RIGHTS

Any termination under this Contract shall not affect the liability of either Party hereto for any of its acts or omissions during the period of the Contract and both Parties shall thereafter continue to be so liable and shall keep the other Party hereto indemnified and hold harmless in respect of any claims arising therefrom.

58.0 EFFECT OF FORCE MAJEURE

58.1 Neither the Government nor the Contractor shall be in breach of its obligations under this Contract if it is unable to perform its obligation under this Contract (or any part of thereof), other than the payment obligations as a result of the occurrence of an Event of Force Majeure.

58.2 An "Event of Force Majeure" is an event beyond the control of both Parties which are:

(a) war (whether declared or not), hostilities, invasion, act of foreign enemies;

(b) insurrection, revolution, rebellion, military or usurped power, civil war, terrorism;

(c) natural catastrophe including but not limited to earthquakes, floods, subterranean spontaneous combustion or any operation of the forces of nature against which an experienced contractor could not reasonably have been expected to take precautions;

(d) nuclear explosion, radioactive or chemical contamination or radiation (unless caused by the negligence act, omission or default of the Contractor, its agents or personnel);

(e) pressure waves caused by aircraft or other aerial devices traveling at sonic or supersonic speeds; and

(f) riot, commotion or disorder, unless solely restricted to employees of the Contractor or its personnel, servants or agents.

Dokumen Meja Terkawal

58.3 If an Event of Force Majeure occurs by reason of which either Party is unable to perform any of its obligation under this Contract (or any part thereof), the Party shall inform the other Party immediately of the occurrence of that Event of Force Majeure with full particulars thereof and the consequences thereof.

58.4 If either Party considers the Event of Force Majeure to be of such severity or to be continuing for such period of time that it effectively frustrates the original intention of this Contract, then the Parties may agree that this Contract may be terminated upon mutual agreement of the Parties.

58.5 If this Contract is terminated by an Event of Force Majeure pursuant to the above clause, all rights and obligations of the Parties under this Contract shall forthwith terminate and neither Party shall have any claim against the other Party and neither Party shall be liable to each other save for any rights and liabilities accruing prior to the occurrence of the Event of Force Majeure.

58.6 Neither Party shall be entitled to rely upon the provisions above if both Parties reasonably determine that an Event of Force Majeure has not occurred.

58.7 For avoidance of doubt, the Parties shall continue to perform those parts of those obligations not affected, delayed or interrupted by an Event of Force Majeure and such obligations shall, pending the outcome of this clause continue in full force and effect.

59.0 SITE AGENT AND ASSISTANTS

Unless otherwise provided elsewhere in this Contract, the Contractor shall keep constantly on the Site a competent, efficient, suitability qualified, experienced and good character site agent and his assistants in each trade as may be necessary who must be capable of receiving instructions in Bahasa Malaysia, and in default it shall be the responsibility of the Contractor to provide replacement for them and all wages and other expenses in connection with the employment of such replacement site agent and assistants. Any directions, explanations or instructions given to such site agent by the S.O. shall be deemed to have been given to the Contractor under this Contract.

60.0 NOMINATED SUB-CONTRACTORS AND/OR NOMINATED SUPPLIERS

60.1 The S.O. shall obtain tenders for Nominated Sub-Contractor's or Nominated Supplier's work or services, or for the supply of materials or goods in respect of which Prime Cost Sums or Provisional Sums are included in the Bills of Quantities, and the Contractor shall, on the written instruction of the S.O., enter into such sub-contracts with the Nominated Sub-Contractor or Nominated Supplier as the case may be and such sub-contracts shall be in the form as referred to in clause 60.2(b).

60.2 The S.O. shall not nominate as a sub-contractor or a supplier in connection with the Works:

(a) a person against whom the Contractor shall make in writing within twenty one (21) days from the date of the S.O.'s instruction under clause 60.1 hereof what the S.O. considers to be reasonable objection;

(b) a person who will not enter into a sub-contract with terms and conditions as provided in the Government standard form of sub-contract for Nominated Sub-contractor (Form PWD 203N) or for Nominated Supplier (Form PWD 203P), as the case may be; or

(c) a person who will not give to the Government such indemnity with terms and conditions as provided in the Government standard form of Letter of Indemnity for Nominated Sub-contractors (Form PWD 203N7) or for Nominated Suppliers (Form PWD 203P7), as the case may be.

Dokumen Meja Terkawal

60.3 If pursuant to clause 60.2, the Contractor is not required to enter into a sub-contract with a Nominated Sub-contractor or Nominated Supplier, as the case may be, the S.O. shall do one or more of the following:

(a) nominate an alternative sub-contractor or supplier, as the case may be, in which case clause 60.2 hereof shall apply;

(b) by order under clause 24 vary the Works or the work or services, materials or goods, the subject of the Prime Cost Sums or Provisional Sum as aforesaid, including if necessary the omission of any such work or services, materials or goods so that they may be provided by workmen, contractors or suppliers, as the case may be, employed by the Government either concurrently with the Works or at some other date in which case the Contractor shall not be entitled to claim for any losses therefrom; or

(c) in accordance with clause 34.4 arrange for the Contractor to execute such work or services, or to supply such materials or goods.

61.0 PAYMENT TO NOMINATED SUB-CONTRACTOR OR SUPPLIER

61.1 The S.O. in issuing Interim Certificates under clause 28 or the Final Certificate under clause 31 hereof shall state separately the amount of interim or final payment due to each Nominated Sub-Contractors or Suppliers which amount subject to clause 61.2 hereof, shall be paid by the Government direct to the Nominated Sub-contractors or Suppliers. The amount paid by the Government direct to the Nominated Sub-contractors or Suppliers shall be deemed to be a payment to the Contractor by the Government under and by virtue of this Contract.

61.2 Subject to the relevant provisions in the sub-contract (Form PWD 203N or Form PWD 203P as the case may be), the Contractor shall be entitled to be paid and the Government may pay to the Contractor out of any money otherwise due to a Nominated Sub-contractors or Suppliers:

(a) any amount which the Government or the S.O. on its behalf in exercise of any rights under this Contract has deducted from any money due to the Contractor and such deduction is in respect of some act or default solely of the Nominated Sub-contractors or Suppliers, his servants or agents;

(b) any amount agreed by the Nominated Sub-Contractor or Suppliers as due to the Contractor, or any amount awarded in arbitration or litigation in favour of the Contractor which arises out of or under the sub-contract; and

(c) the amount of any claim for loss and/or expense actually incurred by the Contractor by reason of any breach or failure to observe the provisions of the sub-contract by the Nominated Sub-contractors or Suppliers under the sub-contract.

61.3 Any amount paid to the Contractor in accordance with this clause shall be deemed to be a payment to the Nominated and/or Sub-Contractors or Suppliers under the sub-contract.

62.0 NO LIABILITY OF GOVERNMENT TO NOMINATED AND/OR SUB-CONTRACTOR OR SUPPLIER

Nothing in clauses 60 or 61 or anything else contained in this Contract shall render the Government in any way liable to any Nominated and/or Sub-Contractor or Supplier.

Dokumen Meja Terkawal

63.0 RESPONSIBILITIES OF CONTRACTOR TO NOMINATED AND/OR SUB-CONTRACTORS OR SUPPLIERS

63.1 The Contractor shall be fully responsible to ensure that the Nominated Sub-Contractor or Suppliers shall conform with the terms and conditions of this Contract and shall be fully responsible for the acts, defaults or breach of any terms and/or conditions of this Contract by the Nominated Sub-Contractors or Suppliers on their part in the same way as for his own or those of other sub-contractors or suppliers engaged by himself. The Government shall in no circumstances be liable to the Contractor for the default of any Nominated Sub-Contractors or Suppliers.

63.2 In the event of repudiation or abandonment of his sub-contract by any Nominated Sub-contractor or Supplier, or the determination by the Contractor of the employment of the Nominated Sub-contractor or Supplier for any reason whatsoever under the sub-contract, the Contractor shall do one of the following :

(a) with the consent of the S.O. (such consent not to be unreasonably withheld) employ another competent sub-contractor or supplier to complete the sub-contract; or

(b) undertake to complete the sub-contract himself.

PROVIDED THAT in any of such events the Contractor is entitled to be paid the same sum for the work or services to be executed, or materials or goods to be supplied, as would have been payable had the original Nominated Sub-contractor or Supplier completed the sub-contract without any default on its part.

64.0 INTELLECTUAL PROPERTY RIGHTS

64.1 The Copyright and all other proprietary rights whatsoever in the Works and other material developed and supplied by the Contractor pursuant to or under this Contract shall vest in and shall be the sole property of the Government and the Contractor shall not during or at any time after completion of the Works or after the expiry or termination of this Contract, in any way, question or dispute the ownership of the Government. The proprietary rights in the Works shall vest in the Government free and clear of all liens, claims and encumbrances on the Works.

64.2 The Contractor shall be responsible for any claim that the equipment supplied infringes a patent, copyright or registered design.

64.3 If the Government's use or possession of the equipment is likely to constitute an infringement, then the Contractor shall promptly and at its own expenses procure for the Government the right to continue using and possessing the equipment; or modify or replace the equipment so as to avoid the infringement (in which event the Contractor shall compensate the Government for the amount of any direct loss or damage sustained or incurred by the Government during such modification or replacement).

64.4 The Contractor shall indemnify the Government against any claim for the infringement of any letters patent, copyright or registered designs by the use of any equipment or of information supplied under this Contract and against all costs and damages which the Government may incur in any action for which such infringements or for which the Government may become liable in any such action.

65.0 ANTIQUITIES

65.1 All fossils, coins, antiquities and other objects of interest or value which may be found on the Site or in excavating the same during the progress of the Works shall become absolute property of the Government and upon discovery of such an object the Contractor shall forthwith-

Dokumen Meja Terkawal

(a) not to disturb the object and shall cease work if and in so far as the continuance of the work would endanger the object or prevent or impede its excavation or its removal;

(b) take all steps which may be necessary to preserve the object in the exact position and condition in which it was found; and

(c) inform the S.O. of the discovery and precise location of the object.

65.2 The S.O. shall issue instructions in regard to what is to be done concerning the object reported by the Contractor under clause 65.1 and (without prejudice to the generality of his power) such instructions may require the Contractor to permit the examination, excavation or removal of the object by a third party. Any such third party shall for the purpose of clause 15 be deemed to be a person for whom the Government is responsible and not to be a sub-contractor.

65.3 If compliance with the provisions of clause 65.1 or with an instruction issued under clause 65.2 has involved the Contractor in direct loss and/or expense for which he would not be reimbursed by a payment made under any other provisions of this Contract then the amount of such loss and/or expense shall be added to the Contract Sum.

66.0 ARBITRATION

66.1 If any dispute or difference shall arise between the Government and the Contractor out of or in connection with the contract, then parties shall refer such matter, dispute or difference to the officer named in Appendix for a decision.

66.2 The officer named in Appendix's decision shall be in writing and shall subject to clause 66.4 hereof, be binding on the Parties until the completion of the Works and shall forthwith be given effect to by the Contractor who shall proceed with the Works with all due diligence whether or not notice of dissatisfaction is given by him.

66.3 If the Parties –

(a) fails to receive a decision from the officer named in the Appendix within forty-five (45) days after being requested to do so; or

(b) is dissatisfied with any decision of the officer named in the Appendix,

then such dispute or difference shall be referred to arbitration within forty-five (45) days to an arbitrator to be agreed between the Parties and failing such agreement, to be appointed by the Director of the Regional Centre for arbitration in Kuala Lumpur on the application of either Party hereto. Such arbitration shall be heard at the Kuala Lumpur Regional Centre for Arbitration and shall be conducted in accordance with the rules for arbitration of the Kuala Lumpur Regional Centre for Arbitration using the facilities and the system available at the Centre.

66.4 Such reference, except on any difference or dispute under clause 51 hereof shall not be commenced until after the completion or alleged completion of the Works or determination or alleged determination of the Contractor's employment under this Contract, or abandonment of the Works, unless with the written consent of the Government and the Contractor.

66.5 In the event that such consent has been obtained in accordance with clause 66.4, the reference of any matter, dispute or difference to arbitration pursuant to this clause and/or the continuance of any arbitration proceedings consequent thereto shall in no way operate as a waiver of the obligations of the parties to perform their respective obligations under this Contract.

66.6 In any arbitration proceedings conducted pursuant to clause 66.3, the Parties may make any counter claim in relation to any dispute or difference arising from the Contract.

Dokumen Meja Terkawal

66.7 Upon every or any such reference the costs of such incidental to the reference and award shall be in the discretion of the Arbitrator who may determine the amount thereof, or direct the amount to be taxed as between solicitor and client or as between party and party, and shall direct by whom and to whom and in what manner the same be borne, award and paid.

66.8 The award of the Arbitrator shall be final and binding on the Parties.

66.9 In the event of the death of the arbitrator or his unwillingness or inability to act, then the Government and the Contractor upon agreement shall appoint another person to act as the arbitrator, and in the event the Government and the Contractor fail to agree on the appointment of an arbitrator, an arbitrator shall be appointed by the Director of the Regional Centre for Arbitration in Kuala Lumpur.

66.10 In this clause, "reference" shall be deemed to be reference to arbitration within the meaning of the Arbitration Act 2005.

66.11 The arbitration shall be governed by the Arbitration Act 2005 and the laws of Malaysia.

67.0 NOTICE, *ETC.*

67.1 Any notice, approval, consent, request or other communication required or permitted to be given or made under this Contract shall be in writing in Bahasa Malaysia or English language.

67.2 Such notice shall be effected by:

(i) hand delivery or courier and an acknowledgement of receipt obtained;

(ii) leaving the notice at the registered office or site office of the Contractor in which case it shall be deemed to have been duly delivered; or

(iii) registered post in which case it shall be deemed to have been received seven (7) days after the date of posting.

67.3 The address of the Government and the Contractor is as shown below or such other address as either party may have notified the sender:

<u>to the Government:</u>

Address:

<u>to the Contractor:</u>

Address:

67.4 It shall be the duty of the parties to notify the other if there is a change of address or entity by giving a written notice within fourteen (14) days. In the event of the Contractor failing to notify the S.O. of such an address or any change in his address, such written notices and instructions shall be deemed to have been served upon the Contractor if they are sent in the manner stated above to the address stated in this Contract or to the Contractor's site office.

Dokumen Meja Terkawal

68.0 SAFETY AT THE SITE

68.1 Compliance with Safety Requirements

The Contractor shall comply with all relevant laws, regulations, rules, by-laws, directive or order by the relevant authorities on the requirements of safety-at-work ("Safety Requirements") and shall ensure his personnel, workmen and sub-contractors at all times during the execution of Works comply with such Safety Requirements.

68.2 Submission of Safety Programme

(a) Within 14 days from the receipt of the Letter of Acceptance by the Government, the Contractor shall submit to the S.O a safety programme to ensure that all construction activities required for the execution of the Works are carried out in a safe manner and in compliance with Safety Requirements.

(b) The safety programme shall be subject to the approval of the S.O. The submission to and approval by the S.O of the safety programme shall not relieve the Contractor of any of his obligations and liabilities pertaining to the saftety requirement under the Contract.

68.3 Safety Officer and Personnel

a) The Contractor shall appoint a suitably qualified and experienced person as safety officer who shall be responsible for compliance with Safety Requirements and all safety matters relating to the Works. The Contractor shall, from time to time, provide such other personnel and resources as may be required to ensure the effective implementation of the safety programme on Site.

b) The Contractor shall conduct training programmes for all workmen including workmen of his sub-contractors for compliance with the Safety Requirements.

68.4 Safety Measures

(a) The Contractor shall ensure that the constructional plant together with all other tools and equipment and other items used in the execution of the Works are in a safe, sound and good condition and capable of performing the functions for which they are intended.

(b) The Contractor is responsible for instituting a safe method of construction on Site for all the workers and shall ensure that his sub-contractors whether nominated or otherwise institute the same method of construction for their workers.

(c) Without limiting his liability under the Contract, the Contractor shall provide all workmen on Site with the necessary safety equipment including but not limited to safety boots, safety helmets and protective clothing.

69.0 ADVANCE PAYMENT

69.1 The Contractor shall be entitled to an advance payment on the Contract amounting to 25% of the value of the Contract Sum less Provisional Sums (hereinafter referred to as the "Builder's Work") but subject to a maximum of RM10 million on compliance with the following conditions:

Dokumen Meja Terkawal

(a) on return of the Letter of Acceptance duly signed by the Contractor together with the Performance Bond (if any), insurance policies, confirmation from SOCSO Authorities and the receipts for all premium paid;

(b) production of a Banker's/Insurance/Finance Company Guarantee in the approved format equal in value to the advance proposed to be paid;

(c) Submission of the Banker's Guarantee / Insurance Guarantee / Financial Company Guarantee not later than 3 months from the date of possession of Site.

69.2 The advance payment shall be recouped when the cumulative total value of the Builder's Work executed and certified (including the amount certified for materials on site) reaches (25%) twenty five percent of the total contract value of Builder's Work, by way of a fixed percentage deduction from the total certified value of the Builder's Work executed (including the amount certified for materials on site) during the period covered by an Interim Payment Certificate, in all the subsequent Interim Payment Certificates on the basis that the advance payment made shall be fully recovered in the Interim Payment Certificate in which the cumulative total certified value of the Builder's Work executed (including the amount certified for materials on site) reaches seventy-five (75) percent of the total contract value of the Builder's work*. The deduction shall be calculated as follows:

$$\$D = 200 \frac{A}{B} \text{ percent of } \$P$$

Where $ D = cumulative deduction to be made in Interim Payment Certificate,

$ A = total amount of advance paid,

$ B = total contract value of Builder's Work

$ P = gross certified value of Builder's Work executed (including the amount certified for materials on site) or agreed cumulative scheduled payments in excess of 25% of $ B

69.3 The liability under the advance guarantee shall be terminated upon realization by the Government of the full sum of advance paid. However if the full sum of the advance paid cannot be realized before the completion date of the contract or any authorised extension thereof or the case of the contract been determined before the date of the determination, then the balance of the advance repayable to the Government shall be recovered from the advance guarantee.

70.0 AMENDMENT

No modification, amendment or waiver of any of the provisions of this Contract shall be effective unless made by mutual consent and made in writing by way of supplementary agreement specifically referring to this Contract and duly signed by the Parties. The provisions in respect of such amendment, variation or modification thereof shall be supplemental to and be read as integral part of this Contract which shall remain in full force and effect as between both Parties.

71.0 CONFIDENTIALITY

71.1 This Contract and all such drawings, records, data, books, reports and all matters pertaining hereto shall be considered as confidential matter and shall not be disclosed to any third party without prior written mutual agreement, save and except where-

Dokumen Meja Terkawal

(a) disclosure of such information is necessary for the purposes of raising finance to undertake the obligations of the Contractor under this Contract;

(b) disclosure of such information is made to the Contractor's consultants, auditors or advisers;

(c) disclosure of such information is required by law or by any government agency or for the performance of any obligations under this Contract; or

(d) the information has entered public domain.

71.2 Where information has been disclosed to third parties pursuant to clause 69.1, the Contractor undertakes to ensure that such third parties shall not disclose the information to any other third party.

71.3 The restrictions contained in this clause shall survive the termination of this Contract and shall continue to bind both Parties without limit in point of time.

72.0 STAMP DUTY

The Contractor shall solely bear the stamp duties, legal costs and fees in the preparation and execution of this Contract and anything incidental thereto.

73.0 SEVERABILITY

If any provision of this Contract is held to be illegal or is invalid under any laws or regulations effective and applicable during the term of this Contract such provision shall be fully severable and this Contract shall be construed as if such illegal or invalid provision had never comprised as part of this Contract and the remaining provisions of this Contract shall remain in full force and effect and shall not be affected by the illegal or invalid provision or by its severance from this Contract.

74.0 WAIVER

Failure by any Party to enforce at any time, any provision of this Contract shall not be construed as a waiver of its right to enforce the breach of such provision or any other provision in this Contract or as a waiver of any continuing, succeeding or subsequent breach of any provision or other provision of this Contract.

75.0 LAWS APPLICABLE

This Contract shall be governed by and construed in accordance with the laws of Malaysia and the Parties irrevocably submit to the exclusive jurisdiction of the courts of Malaysia.

76.0 SUCCESSORS BOUND

This Contract shall be binding upon the respective successors-in-title of the Parties.

Dokumen Meja Terkawal

77.0 EPIDEMICS AND MEDICAL ATTENDANCE

77.1 The Contractor shall maintain the Site in clean and sanitary condition and shall comply with all requirements of the Government Health and Sanitary Authorities. In the event of any outbreak of illness of an epidemic nature, the Contractor shall comply with and carry out such regulations, orders and requirements as may be made by the Government or the local medical or health authorities for the purpose of dealing with and overcoming the same.

77.2 The Contractor shall ensure that sufficient first aid kits are made available at suitable locations on the Site.

78.0 TECHNOLOGY TRANSFER

If the Contractor appoints foreign professionals, the Contractor shall endeavour to ensure that the employees of the Government are trained or exposed to the expertise of such foreign professionals pursuant to a programme for technology transfer.

79.0 GENERAL DUTIES AND PERFORMANCE STANDARD

78.1 Industry Practice

The Contractor shall provide and perform the Works in a proper manner in accordance with good management and best industry practice and to the best advantage of the Government and shall comply with all law, statutes and any guidelines or direction issued by the Government to the contractor from time to time.

79.2 Competency

The Contractor shall provide and perform its obligations under this Contract and take all appropriate measures expected of a competent company using due care and skills of a professional person providing similar service or works to ensure that the Works comply with the terms and conditions of this Contract.

79.3 Government's Interest

The Contractor shall at all times perform the Works in such manner as will always safeguard and protect the Government's interest and take all necessary and protect the Government' interest take all necessary and proper steps to prevent abuse and in accordance with the provisions of this Contract.

80.0 RESTRICTION AND PROCEDURE ON USE OF IMPORTED MATERIALS AND GOODS

80.1 The Contractor shall use local goods/materials as listed in the 'Senarai Bahan/Barangan Buatan Tempatan' issued by IKRAM QA Services Sdn. Bhd. and/or issued by SIRIM QA Services Sdn. Bhd., whichever is relevant. If the Contractor fails to comply with this requirement, the Government may reject the goods/materials which are found to be not in compliance with this requirement.

80.2 For local goods/materials not listed as aforesaid, such goods/materials may be allowed if prior testing and certification from IKRAM QA Services Sdn. Bhd. or SIRIM QA Services Sdn. Bhd., whichever is relevant, has been obtained. Where such testing cannot be carried out by IKRAM

Dokumen Meja Terkawal

QA Services Sdn. Bhd. or SIRIM QA Services Sdn. Bhd. the Contractor may, with the S.O.'s prior approval, have the testing to be done by another agency.

80.3 Under no circumstances shall the Contractor be permitted to incorporate or supply imported materials, plant, equipment, vehicles or other goods into the Works or forming part of the scope of the Works except those approved by the Government, prior to the execution of the Contract. The Contractor shall at his own cost entirely substitute any materials, plant, equipment, vehicles or other goods proposed to be imported but not approved by the Government, with suitable local materials, plant, equipment, vehicles or other goods, including making any necessary subsequential changes or adjustment to the design of the Works to accommodate such substitution, all to the concurrence of the S.O..

80.4 The Contractor shall ensure that the procurement of approved imported materials, plant, equipment, vehicles or other goods are obtained directly from the country of origin based on F.O.B. or other similar basis. The transportation and insurance of such imported materials, plant, equipment, vehicles or other goods from the country of origin to the Site shall be arranged by the Contractor through the Government's Multi Modal Transport Operators (hereinafter referred to as MTO) as listed in Appendix. The Contractor shall allow in his tender all costs and time required in complying with the requirements of this Clause including the cost required for the services provided by the MTO.

80.5 The Contractor shall submit documentary evidence of compliance with this clause to the S.O. within one (1) month from the date of each delivery to the Site of such materials, plant, equipment, vehicles or other goods.

81.0 TIME

Time whenever mentioned shall be of the essence of this Agreement.

Dokumen Meja Terkawal

IN WITNESS WHEREOF the Parties hereto have executed this Agreement on the day and year first above written.

SIGNED for and on behalf of	)	
	)	.....
THE GOVERNMENT OF MALAYSIA	)	
	)	
in the presence of:	)	.....
	)	
*[1]The Common Seal of	)	
	)	
	)	
(Co. No. :)	)	
was hereunto affixed	)	
in the presence of:	)	

.....	.....
Director	Director/Secretary
Name :	Name :
NRIC No.:	NRIC No.:

[1] *applicable only if the Contractor is a company registered under the Companies Act 1965*

Dokumen Meja Terkawal

APPENDIX TO THE CONDITIONS OF CONTRACT

Clause
4.1(a) Officer(s) empowered to approve variations according to the limits as set out in Treasury's Instructions No. 202 as amended.

Financial Limits	Officer

4.1(b) Officer(s) empowered to take action on behalf of the Government in respect of:

Clauses 51, 52, 53, 58 and 66... ... ...

13 Performance Bond

Amount of Guarantee ... ... RM.....

Guarantor Bank/Insurance Company/
Finance Company ... ...

Guarantee No. ... .

15 Minimum insurance cover for any one accident or series of accidents arising out of one event ... ... RM.....

Policy No.....

Period of insurance.....

15.1 (b) Amount of excess ... ... RM.....

Dokumen Meja Terkawal

APPENDIX TO THE CONDITIONS OF CONTRACT - (Cont'd)

Clause		
17	SOCSO Scheme registration number..	
18	Amount to be added to full value of Contract Sum as the insured sum	RM.....
	Total Amount Insured	RM.....
		Policy No.....
		Period of insurance .....
18 (b)	Amount of excess	RM.....
21.2	Date of Tender	.....
28.1	Value of work to be executed including materials and goods to be delivered before First Interim Certificate will be issued	RM.....
28.2	Value of work to be executed including materials and goods to be delivered before each subsequent Interim Certificate will be issued	RM.....
28.6	Period for honouring payment certificate (if none stated, then within thirty (30) days of the issue of the Certificate)	.....
34.4	Work covered by P.C. Sums for which the Contractor will be permitted to tender	.....
38.2	`Date for Possession' of the Site	.....
39.1	`Date for Completion' for whole of the Works. ..	.....
40.2	Liquidated and Ascertained Damages at the rate of	RM.....per.....

Dokumen Meja Terkawal

APPENDIX TO THE CONDITIONS OF CONTRACT - (Cont'd)

Clause

41.1 Sectional Completion:

Identification of Sections or parts	Date for Possession [Clause 38.3]	Date for Completion	Liquidated & Ascertained Damages

48.1(a) Defects Liability Period (if none stated, then the period is twelve (12) months) ... ...

5.3, 5.4, 15.3, 17.3(b), 18.2 Percentage of on-cost charges 5%

48.2, 56.2(d) Percentage of on-cost charges 10%

Dokumen Meja Terkawal

JKR Malaysia,
Jalan Sultan Salahuddin
50580 Kuala Lumpur

Dokumen Meja Terkawal

ADDENDA KEPADA SYARAT-SYARAT KONTRAK

Dokumen Meja Terkawal

ADDENDA NO. 1 KEPADA SYARAT-SYARAT KONTRAK JKR 203 SEMAKAN 10/83

BIL.	PINDAAN-PINDAAN

1. Muka Surat 14, Fasal 28(c)

Tambahkan selepas fasal 28(c)(ii), fasal baru 28(c)(iii) seperti berikut:

"Seseorang yang enggan memberi kepada Majlis tanggung rugi sedemikian rupa atas terma dan syarat sebagaimana diperuntukkan dalam Surat Jaminan Tanggung Rugi Kerajaan yang standard bagi Sub-kontraktor Dinamakan (Borang JKR 203N7) atau bagi Pembekal Dinamakan (Borang JKR 203P7), mengikut mana yang berkenaan."

2. Muka Surat 14, Fasal 28(e)

Batalkan fasal 28(e) dan gantikan dengan fasal 28(e) yang baru seperti berikut:

"P.P. dalam mengeluarkan Perakuan Interim di bawah Fasal 47 atau Perakuan Muktamad di bawah Fasal 48 syarat-syarat ini, hendaklah menyatakan secara berasingan amaun bayaran interim atau bayaran muktamad yang kena dibayar kepada tiap-tiap Sub-kontraktor Dinamakan atau pembekal Dinamakan yang mana amaun itu tertakluk kepada Fasal 28(f) syarat-syarat ini, hendaklah dibayar oleh Kerajaan terus kepada Sub-kontraktor Dinamakan atau Pembekal Dinamakan. Amaun yang dibayar terus kepada Sub-kontraktor Dinamakan atau Pembekal Dinamakan oleh Majlis hendaklah disifatkan sebagai bayaran yang telah dibuat oleh Majlis kepada Kontraktor di bawah Kontrak ini."

3. Muka Surat 14, Fasal 28(f)

Batalkan fasal 29(f) dan gantikan dengan fasal 28(f) yang baru seperti berikut:

"Tertakluk kepada syarat-syarat berkaitan dalam sub-kontrak (Borang JKR 203N atau JKR 203P mengikut mana yang berkenaan), Kontraktor adalah berhak dibayar dan Majlis boleh membuat bayaran kepada Kontraktor dari jumlah wang yang kena dibayar kepada Sub-kontraktor Dinamakan atau Pembekal Dinamakan :-

(i) Sebarang amaun yang telah dipotong oleh Majlis atau P.P. bagi pihaknya semasa mengamalkan sebarang hak di bawah kontrak, dari apa-apa jumlah wang yang kena dibayar kepada Kontraktor dan potongan sedemikian adalah berpunca khusus dari tindakan atau kemungkiran Sub-kontraktor Dinamakan atau Pembekal Dinamakan, pengkhidmat atau ejennya;

Dokumen Meja Terkawal

ADDENDA NO. 1 KEPADA SYARAT-SYARAT KONTRAK JKR 203 SEMAKAN 10/83

BIL.	PINDAAN-PINDAAN

3. Muka Surat 14, Fasal 28(f) (Samb.)

(ii) sebarang amaun yang telah dipersetujui oleh Sub-kontraktor Dinamakan atau pembekal Dinamakan yang kena dibayar kepada Kontraktor, atau sebarang amaun yang diaward kepada kontraktor oleh timbangtara atau dakwaan mahkamah berpunca dari atau di bawah Sub-kontrak ini;

(iii) amaun tuntutan bagi kerugian dan/atau perbelanjaan sebenar yang ditanggung oleh Kontraktor atas sebab pecah kontrak atau kegagalan Sub-kontraktor Dinamakan atau Pembekal Dinamakan mematuhi syarat-syarat Sub-kontrak ini;

Sebarang amaun yang dibayar kepada Kontraktor menurut Fasal ini hendaklah disifatkan sebagai bayaran kepada Sub-kontraktor Dinamakan atau Pembekal Dinamakan di bawah Sub-kontrak ini.

4. Muka Surat 15, Fasal 28(g)

i)Batalkan fasal 28(g) dan gantikan dengan Fasal 28(g) yang baru seperti berikut:

"Tiada apa-apa dalam Fasal ini atau apa-apa jua perkara terkandung dalam Kontrak ini boleh menyebabkan Majlis dengan apa jua cara bertanggungan ke atas mana-mana Sub-kontraktor Dinamakan atau Pembekal Dinamakan.

ii) Batalkan perkataan "Tiada apa-apa hubungan kontrak antara Majlis dan" pada tajuk kecil fasal 28(g) dan gantikan dengan perkataan "Tiada Tanggungan Kerajaan kepada"

Dokumen Meja Terkawal

ADDENDA NO. 2 KEPADA SYARAT-SYARAT KONTRAK BORANG JKR 203 SEM. 10/83

BIL.	PINDAAN-PINDAAN

1. **Muka Surat 5, Fasal 2(c)(ii), baris 2**

   Batalkan koma selepas perkataan P.P.

2. **Muka Surat 6, Fasal 5(a)(vi)**

   Tambah ayat "sebagaimana disebutkan dalam Fasal 9(b) syarat-syarat ini," sebelum ";"

3. **Muka Surat 6, Fasal 5(b), baris 6**

   Tambah rangkaikata "melaksanakan kerja-kerja ini dengan menggunakan punca-punca Jabatan atau" sebelum perkataan "mengambil" dan tambah rangkaikata "seorang kontraktor atau" selepas perkataan "membayar"

4. **Muka Surat 6, Fasal 5(b), baris 9**

   Tambah rangkaikata "atau P.P. bagi pihak Majlis " selepas perkataan " Majlis "

5. **Muka Surat 7, Fasal 6, Tajuk**

   Tambah perkataan "DLL." selepas "NOTIS"

6. **Muka Surat 7, Fasal 6, baris 7**

   Ganti perkataan "ejen" ke "Ejen"

7. **Muka Surat 7, Fasal 7(a), baris 1**

   Ganti perkataan "P.P." kepada " Majlis "

8. **Muka Surat 8, Fasal 10, baris 2**

   Ganti perkataan "Kerja" kepada "Tapak Bina"

9. **Muka Surat 10, Fasal 16(b), baris 3**

   Tambah perkataan "Malaysia" selepas " Majlis "

10. **Muka Surat 10, fasal 18, baris 10**

    Ganti noktah kepada koma dan tambah rangkaikata "dan sebarang kos tambahan yang ditanggung oleh Majlis berhubung dengan pengawasan Kerja"

Dokumen Meja Terkawal

ADDENDA NO. 2 KEPADA SYARAT-SYARAT KONTRAK BORANG JKR 203 SEM. 10/83

BIL.	PINDAAN-PINDAAN

11. Muka Surat 11, Fasal 19, baris 7

Ganti perkataan "ejen" kepada "Ejen"

12. Muka Surat 11, Fasal 21, baris 1

Batalkan perkataan "dilakukan"

13. Muka Surat 13, Fasal 27(d)

Batalkan rangkaikata "melainkan dengan ..... kontrak ini,"

14. Muka Surat 17, Fasal 33(c), baris 4

Batalkan perkataan "yang dibayar"

15. Muka Surat 19, Fasal 35(b), baris 2

Ganti perkataan "Kontraknya" kepada "Kontrak ini"

16. Muka Surat 23, Fasal 43(e), baris 3

Batalkan perkataan "yang" dan ganti dengan "sama ada"

17. Muka Surat 24, Fasal 45(a), baris 3

Ganti perkataan "selepas" kepada "dari"

Dokumen Meja Terkawal

ADDENDA NO. 2 KEPADA SYARAT-SYARAT KONTRAK BORANG JKR 203 SEM. 10/83

BIL.	PINDAAN-PINDAAN

18. Muka surat 25, Fasal 47(a)

Gantikan keseluruhan Fasal 47(a) dengan Fasal 47(a) yang baru sebagaimana berikut:

Apabila Kontraktor telah melaksanakan kerja, termasuk hantar-serahan ke Tapak Bina atau ke tempat yang berdampingan dengan Tapak Bina, akan bahan atau barang-barang takpasang yang dicadang untuk dimasukkan ke dalam Kerja, mengikut terma-terma Kontrak ini dan nilai jumlah kerja yang telah disempurnakan dan sehingga sejumlah peratus dari nilai bahan dan barang-barang takpasang yang dinyatakan di Fasal 47(c) di bawah ini yang dihantar-serah ke Tapak Bina untuk dimasukkan ke dalam kerja telah mencapai jumlah wang yang disebut dalam Lampiran kepada Syarat-syarat ini. P.P. hendaklah pada masa itu membuat penilaian pertama ke atas kerja yang dilaksanakan dengan sempurnanya. Selepas itu, sekali (atau lebih kerap mengikut budibicara P.P.) dalam tiap-tiap bulan yang berikutnya, P.P. hendaklah membuat suatu nilaian yang berpatutan tentang kerja yang dilaksanakan dengan sempurnanya dan bahan dan barang-barang takpasang yang dihantar-serah ke Tapak Bina atau ke tempat yang berdampingan dengannya, dengan syarat bahawa jumlah nilai kerja yang telah disempurnakan dan sehingga sejumlah peratus dari nilai bahan dan barang-barang takpasang yang dinyatakan di Fasal 47(c) di bawah ini yang dihantar-serah ke Tapak Bina untuk dimasukkan ke dalam Kerja dalam tiap-tiap penilaian kemudiannya seperti yang tersebut itu hendaklah tidak kurang dari jumlah wang yang disebut dalam Lampiran kepada Syarat-syarat ini.

19. Muka surat 25, Fasal 47(c)

Gantian keseluruhan Fasal 47(c) dengan Fasal 47(c) yang baru sebagaimana berikut:

Amaun yang dinyatakan sebagai kena dibayar dalam Perakuan Interim hendaklah, tertakluk kepada apa-apa persetujuan antara pihak-pihak itu mengenai pembayaran secara berperingkat-peringkat, merupakan anggaran jumlah nilai kerja yang dilaksanakan dengan sempurnanya dan jumlah peratus daripada nilai bahan dan barang-barang takpasang yang ditetapkan di bawah syarat ini:

(i) sehingga sembilan puluh (90) peratus jika bahan dan barang-barang takpasang adalah untuk kerja binaan bangunan dan kerja kejuruteraan awam

(ii) sehingga sembilan puluh (90) peratus jika bahan dan barang-barang takpasang adalah untuk kerja mekanikal dan kerja elektrik yang dihantar-serah ke Tapak Bina atau ke tempat yang berdampingan dengannya yang dicadangkan untuk dimasukkan ke dalam Kerja itu sehingga dan termasuk pada tarikh penilaian itu dibuat, ditolak apa-apa ansuran yang dibayar dahulunya di bawah Syarat ini. Dengan syarat bahawa perakuan itu hendaklah termasuk hanya nilai bahan dan barang-barang takpasang tersebut seperti dan dari masa ianya dihantar-serah dengan munasabah dan dengan sempurnanya dan tidak terlalu awal, ke Tapak Bina atau ke tempat yang berdampingan dengannya, dan hanya jika dilindungi dengan secukupnya terhadap cuaca, kerosakan dan kemerosotan.

Dokumen Meja Terkawal

ADDENDA NO. 2 KEPADA SYARAT-SYARAT KONTRAK BORANG JKR 203 SEM. 10/83

BIL.	PINDAAN-PINDAAN

20. Muka Surat 26, Fasal 50, baris 5

Masukkan "dan Fasal 48" selepas "Fasal 47"

21. Muka Surat 27, Fasal 51(a)(v)

Ganti "Fasal 27(a) dan (b)" dengan "Fasal 27(a), (b) dan (d)"

22. Muka Surat 29, Fasal 54(c), baris 5

Masukkan perkataan "dalam tempoh" selepas perkataan "atau"

23. Muka Surat 31, Fasal 3(a)(ii)

Selepas "Pegawai" tambah "(atau Pegawai-pegawai)"

24. Muka Surat 32, Fasal 33(a) dan 36(b)

Batalkan perkataan "fasal"

25. Muka Surat 32, Fasal 36

Masukkan di antara baris ke 3 dan ke 4:

Jumlah Amaun yang diinsurankan ..... RM.....

26. Muka Surat 33, Fasal 54(h), baris 3

Batalkan perkataan "mana-mana"

27. Ganti perkataan "P.P." atau "Kerajaan" dengan perkataan "pegawai yang dinamakan dalam lampiran"

a. Muka Surat 21, Fasal 40, baris 2
b. Muka Surat 22, Fasal 43, para 1, baris 3 selepas perkataan "pendapat
c. Muka Surat 23, Fasal 43, baris 2 & 7 dari akhir
d. Muka Surat 27, Fasal 51(a), baris 3 & 7 dari akhir
e. Muka Surat 27, Fasal 51(b), baris 1
f. Muka Surat 29, Fasal 54(a), baris 9
g. Muka Surat 29, Fasal 54(b), baris 1
h. Muka Surat 29, Fasal 54(c), baris 1, 3, 5 & 6

Dokumen Meja Terkawal

ADDENDA NO. 3 KEPADA SYARAT-SYARAT KONTRAK JKR 203A SEMAKAN 10/83

BIL.	PINDAAN-PINDAAN

1. Muka surat 20, Fasal 47

Tambahkan selepas Fasal 47(c), fasal baru 47(c) seperti berikut:

"Dengan syarat sentiasanya bahawa peruntukan Fasal 47(a) dan 47(b) mengenai bahan-bahan dan barang-barang takpasang tidak boleh digunakan bagi artikel-artikel yang dibekal dan diserah-hantar oleh Pembekal Dinamakan yang mana artikel-artikel tersebut tertakluk kepada peruntukkan Sub-kontrak hendaklah diperakukan nilai sepenuhnya".

Dokumen Meja Terkawal

ADDENDA NO.4 KEPADA SYARAT-SYARAT KONTRAK JKR 203 SEMAKAN 10/83

BIL.	PINDAAN-PINDAAN

1. Muka surat 5, Fasal 4

Gantikan keseluruhan Fasal 4 dengan Fasal 4 baru seperti berikut:

Kontraktor hendaklah, mengikut dan tertakluk kepada Syarat-syarat ini, membina dan menyiapkan Kerja yang ditunjukkan dalam Pelan-pelan Kontrak dan diperihalkan oleh atau dirujukkan kepada dalam Spesifikasi dan dalam Perkara-perkara Perjanjian dan Syarat-syarat ini, dengan pematuhan kepadanya, menggunakan bahan-bahan, barang-barang dan mutu hasil kerja menurut kualiti dan piawaian yang dinyatakan dalam dokumen-dokumen itu. Kontraktor hendaklah juga memperbaiki apa-apa kecacatan, ketidak-sempurnaan, kekecutan atau apa-apa jua kerosakan lain yang mungkin didapati dalam masa Tempoh Liabiliti Kecacatan mengikut Fasal 45 Syarat-syarat ini.

2. Muka surat 7, Fasal 9

Gantikan keseluruhan Fasal 9(a) dengan Fasal 9(a) baru seperti berikut:

(a) Semua bahan, barang dan mutu hasil kerja hendaklah daripada jenis dan piawaian masing-masing sebagaimana diperihalkan dalam Spesifikasi. Kontraktor hendaklah, apabila diminta oleh P.P. memberi kepadanya baucar-baucar dan/atau perakuan ujian pengilang untuk membuktikan bahawa bahan-bahan dan barang-barang itu mematuhi kehendak-kehendak itu.

3. Muka surat 12, Fasal 24(b)

Gantikan keseluruhan Fasal 24(b) dengan Fasal 24(b) baru seperti berikut:

(b) Istilah "perubahan" ertinya perubahan atau ubahsuaian tentang rekabentuk, kualiti atau kuantiti Kerja sebagaimana ditunjukkan dalam Pelan-pelan Kontrak, Senarai Kuantiti dan Spesifikasi, dan termasuklah tambahan, peninggalan atau penggantian apa-apa kerja, perubahan tentang jenis atau piawaian apa-apa bahan atau barang yang dilaksanakan atau dibawa ke tempat Kerja oleh Kontraktor bagi maksud Kerja itu selain daripada kerja, bahan-bahan atau barang-barang yang tidak mematuhi Kontrak ini.

Dokumen Meja Terkawal

ADDENDA NO. 5 (Pind. 2002) KEPADA SYARAT-SYARAT KONTRAK JKR 203 SEMAKAN 10/83

BIL.	PINDAAN-PINDAAN

1. Batalkan keseluruhan Subfasal 34(b), (c), (d) dan (e) di muka surat 17 dan 18.

2. Batalkan keseluruhan rujukan kepada Fasal 34 di Lampiran kepada Syarat-Syarat Kontrak di muka surat 32.

3. Gantikan Fasal 35(a) di muka surat 18 dengan Fasal 35(a) yang baru seperti berikut:

   ' Kontraktor hendaklah mengemukakan Nombor Kod dan Nombor-nombor Keselamatan Sosial semua pekerja di tapak bina yang dikehendaki diberi perlindungan di bawah Akta Keselamatan Sosial Pekerja 1969 kepada P.P. untuk diperiksa.'

Dokumen Meja Terkawal

ADDENDA NO.6 KEPADA SYARAT-SYARAT KONTRAK JKR 203 SEMAKAN 10/83

BIL.	PINDAAN-PINDAAN

1. Muka surat 20, Fasal 37(a)

Gantikan Fasal 37(a) dengan Fasal 37(a) yang baru seperti berikut:

" Kontraktor hendaklah sebagai syarat terdahulu sebelum memulakan kerja mendepositkan dengan Kerajaan, suatu Bon Pelaksanaan berupa Gerenti Bank atau Gerenti Insurans yang diluluskan yang senilai dengan lima peratus daripada Jumlah Harga Asal Kontrak bagi pematuhan dan pelaksanaan yang wajar bagi Kontrak ini. Sekiranya Kontraktor gagal untuk mengemukakan Bon Pelaksanaan tersebut pada tarikh milik tapak, maka Kontraktor hendaklah dianggap telah memilih Bon Pelaksanaan dalam bentuk Wang Jaminan Pelaksanaan sebagaimana yang diperuntukkan di bawah Peruntukan Khas kepada Syarat-Syarat Kontrak".

2. Muka surat 27, Fasal 51(b)

Gantikan Fasal 51(b) dengan Fasal 51(b) yang baru seperti berikut:

(b) Jika Kontraktor:

i) gagal untuk memulakan Kerja dalam tempoh dua (2) minggu dari tarikh milik tapak,

ii) melakukan suatu perbuatan kebangkrapan, atau

iii) menjadi tak solven atau membuat penyelesaian dengan pemiutang-pemiutangnya atau membuat perkiraan dengan mereka itu, atau

iv) sebagai suatu syarikat, ia menghadapi suatu perintah penggulungan yang dibuat terhadapnya, atau

v) mempunyai seorang likuidator, penerima atau pengurus sementara bagi urusan atau pengusahaannya yang dilantik dengan sewajarnya, atau menyerahkan pemilikan supaya diambil oleh atau bagi pihak pemiutang-pemiutang atau pemegang-pemegang debentur bercagar dengan gadaian terapung akan apa-apa harta yang terkandung dalam gadaian terapung atau tertakluk kepada gadaian terapung itu;

maka, dan dalam mana-mana hal tersebut itu, Majlis boleh, tanpa menjejaskan apa-apa hak lain yang ada padanya, melalui suatu notis yang dihantar dengan pos berdaftar menamatkan pengambilan kerja Kontraktor di bawah Kontrak ini.

Dokumen Meja Terkawal

ADDENDA NO. 7 KEPADA SYARAT-SYARAT KONTRAK JKR203 SEMAKAN 10/83

BIL.	PINDAAN-PINDAAN

Gantikan fasal 26(a)(ii) dengan fasal seperti berikut:

26(a)(ii) Majlis berhak untuk menyelaras kadar-kadar harga dalam Jadual Kadar Harga dan harga-harga dalam Ringkasan Tender yang dikemukakan oleh Kontraktor untuk memastikan kemunasabahannya sebelum tender disetujuterima dan keputusan Kerajaan adalah muktamad

Dokumen Meja Terkawal

PERUNTUKAN KHAS KEPADA SYARAT-SYARAT KONTRAK

Dokumen Meja Terkawal

PERUNTUKAN KHAS KEPADA SYARAT-SYARAT KONTRAK JKR 203/203A

BON PERLAKSANAAN DALAM BENTUK WANG JAMINAN PERLAKSANAAN

1.0 Bagi pematuhan dan pelaksanaan yang wajar bagi Kontrak ini, Kontraktor boleh memilih untuk mengambil Bon Pelaksanaan dalam bentuk Wang Jaminan Pelaksanaan untuk menggantikan wang tunai. Deposit Perbendaharaan, Draf Bank, Gerenti Bank atau Gerenti insurans sebagaimana yang dinyatakan dalam Fasal 37 Syarat-syarat Kontrak. Sekiranya Kontraktor memilih untuk mengambil Bon Pelaksanaan pindaan kepada klausa-klausa yang berkenaan di bawah Syarat-syarat Kontrak hendaklah dan adalah dipersetujui seperti berikut:

(a) **Bon Perlaksanaan**

(i) Fasal 37(a) hendaklah digantikan dengan fasal berikut :-

Kontraktor akan dikenakan potongan sebanyak sepuluh peratus (10%) daripada bayaran interim sehingga mencapai jumlah lima peratus (5%) harga kontrak asal bagi pematuhan dan perlaksanaan yang wajar bagi Kontrak ini.

(ii) Fasal 37(b) hendaklah dibatalkan

(b) **Pemilikan Tapak Bina**

(i) Fasal 38(a) hendaklah digantikan dengan fasal berikut :

Tiada apa jua Kontrak ini boleh dimulakan melainkan jika dan sehingga apa-apa polisi insurans sebagaimana dinyatakan di bawah fasal 33, 34 dan 36 Syarat-syarat ini telah pun didepositkan dengan kerajaan atau P.P.. Dengan syarat bahawa bagi maksud-maksud Syarat ini sahaja (dan bukan bagi maksud lain), jika Kontraktor mengemukakan kepada kerajaan atau P.P. Nota Perlindungan bagi polisi insurans tersebut dan resit-resit premium yang telah dibayar, maka adalah menjadi pelepasan yang mencukupi terhadap obligasinya di bawah Syarat ini.

(c) **Pendudukan Separa Oleh Kerajaan**

(i) Fasal 42 (f) hendaklah digantikan dengan fasal berikut :-

Adalah dipersetujui dengan nyatanya bahawa tiada apa jua yang terkandung dalam perenggan-perenggan terdahulu daripada ini boleh menghakkan Kontraktor untuk mendapatkan pelepasan dari Bon Pelaksanaan atau mana-mana bahagian daripadanya yang bermaksud bahawa Bon Perlaksanaan tersebut atau mana-mana bahagian daripadanya hendaklah dilepaskan atau

Dokumen Meja Terkawal

dipulangkan hanya setelah siap membaiki semua kecacatan, ketidaksempurnaan, kekecutan atau apa-apa jua kerosakan lain yang mungkin kelihatan dalam masa Tempoh Liabiliti Kecacatan dan setelah diberi Perakuan Siap Memperbaiki Kecacatan bagi seluruh kerja itu dibawah Fasal 45 Syarat-syarat ini.

(d) **Pembayaran kepada Kontraktor dan Perakuan Interim**

(i) Fasal 47 (b) hendaklah digantikan dengan fasal berikutnya :-

P.P hendaklah dalam tempoh empat belas (14) hari dari tarikh sesuatu penilaian tersebut dibuat dan tertakluk kepada syarat yang dinyatakan dalam subfasal (a) diatas, mengeluarkan suatu Perakuan Interim menyatakan amaun yang kena dibayar kepada Kontraktor oleh Kerajaan. Dengan syarat bahawa penandatangan Kontrak ini tidak boleh menjadi satu syarat terlebih dahulu bagi mengeluarkan Perakuan Interim yang pertama (dan bukannya perakuan yang lain) asalkan Kontraktor telah mengembalikan Surat Setujuterima Tender yang sempurna ditandatangani dan telah mendepositkan dengan P.P atau Kerajaan polisi-polisi insurans yang berkenaan di bawah Fasal 33, 34 dan 36 Syarat-syarat ini.

(ii) Fasal 47(d) hendaklah digantikan dengan Fasal 47(d) yang baru seperti berikut :

Dalam beberapa hari sebagaimana yang dinyatakan dalam Lampiran kepada Syarat-syarat ini (atau jika tidak disebutkan maka dalam masa tiga puluh (30 hari) selepas dikeluarkan sesuatu Perakuan Interim sebagaimana tersebut di atas, Kerajaan akan membuat pembayaran kepada kontraktor sebanyak sembilan puluh peratus (90%) daripada amaun yang diperakui sebagai kena dibayar kepada Kontraktor dalam Perakuan tersebut dengan baki sejumlah sepuluh peratus (10%) ditahan sebagai Wang jaminan Pelaksanaan. Dengan syarat bahawa apabila Wang Jaminan Pelaksanaan ini mencapai lima peratus (5%) daripada Harga Kontrak Asal maka mana-mana bayaran yang dibuat dalam Perakuan Interim seterusnya hendaklah bagi jumlah amaun yang diperakui sebagai kena dibayar kepada Kontraktor.

Dokumen Meja Terkawal

BORANG TENDER

Dokumen Meja Terkawal

BORANG INI HENDAKLAH DIGUNAKAN JIKA KUANTITI MENJADI SEBAHAGIAN DARIPADA KONTRAK

(THIS FORM IS TO BE USED WHERE QUANTITIES FORM PART OF THE CONTRACT)

Kontrak No ..... tahun 20 .....
Contract No *Of*
bagi Kerja-Kerja tersebut di bawah ini yang dibuat pada ..... haribulan ..... tahun ..... oleh pihak-pihak yang bertandatangan di bawah ini, adalah berhubung dengan Borang Tender ini yang menjadi sebahagian daripada Kontrak tersebut dan yang hendaklah dibaca dan diertikan sedemikian.
for the under-mentioned Works entered into on the day of by the undersigned parties, refers to this Form of Tender which is and shall be read and construed as part of the said Contract.

....	.....
Tandatangan Kontraktor *Signature of Contractor*	Tandatangan Pegawai *Signature of Officer*
(Nama Penuh.....) *Name in Full*	(Nama Penuh .....) *Name in Full*
No. Kad Pengenalan ..... *Identity Card No.*	No. Kad Pengenalan ..... *Identity Card No.*
Atas sifat..... *In the capacity of* yang diberikuasa dengan sempurnanya untuk menandatangani untuk dan bagi pihak *duly authorised to sign for and on behalf of*	Jawatan..... *Designation* Untuk dan bagi pihak KERAJAAN *For and on behalf of GOVERNMENT*
..... Meteri atau Cop Kontraktor *Contractor's seal or chop*	
Saksi ..... *Witness* (Nama Penuh.....) *Name in Full* No. Kad Pengenalan ..... *Identity Card No.* Pekerjaan ..... *Occupation* Alamat ..... *Address*	Saksi ..... *Witness* (Nama Penuh .....) *Name in Full* No. Kad Pengenalan ..... *Identity Card No* Jawatan ..... Designation

2. Yang bertandatangan di bawah ini bersetuju menjadi terikat oleh dan tunduk kepada Syarat-Syarat Kontrak dan Senarai Kuantiti yang terletak harganya dan/atau Spesifikasi tersebut dan bersetuju bahawa sebelum Surat Setujuterima Tender dikeluarkan, harga atau kadar harga dalam Senarai Kuantiti hendaklah diteliti dan diselaraskan oleh Pegawai Penguasa dengan memastikan kemunasabahannya tanpa mengubah amaun yang dinyatakan di dalam Borang Tender.

The undersigned agrees to be bound by and submit to the Conditions of Contract and priced Bills of Quantities and Specification and agrees that before the issuance of the Letter of Acceptance, the prices or rates in the Bills of Quantities shall be scrutinized and adjusted by the Superintending Officer as to its reasonableness without altering the amount as stated in the Form of Tender.

Senarai Kuantiti yang terletak harganya tersebut, selepas diperbetulkan atau diselaraskan sebagaimana yang diperuntukkan dalam Syarat-Syarat Kontrak, hendaklah menjadi asas bagi menilaikan bayaran interim dan apa-apa perubahan yang mungkin diarahkan oleh Pegawai Penguasa dari semasa ke semasa.

The said priced Bills of Quantities after rectification or adjustment as provided in the Conditions of Contract, shall form the basis of valuation for interim payment and any variation which may from time to time be ordered by the Superintending Officer.

3. Dan selanjutnya, yang bertandatangan di bawah ini bersetuju menyiapkan Kerja itu dalam masa ..... hari/minggu/bulan* dari tarikh pemilikan tapakbina atau dalam apa-apa tempoh lanjutan yang diperuntukkan dalam Syarat-Syarat Kontrak.

And further, the undersigned agrees to complete the Works within ..... days/weeks/months from the date of possession of site or within such extended time* as *by the Conditions of Contract provided.*

4. Jumlah amaun Tender ini ialah jumlah wang pukal sebanyak Ringgit Malaysia.....

The total amount of the Tender is the lump sum of Ringgit Malaysia

.....

.....

iaitu, RM.....

i.e.

5. Yang bertandatangan di bawah ini berharap dibenarkan membuat tender, dalam sedikit masa lagi bagi kerja berikut yang mana dijalankan secara langsung oleh yang bertandatangan di bawah ini dalam perjalanan biasa perniagaannya dan yang baginya Wang Kos Prima atau Wang Peruntukan Sementara telah dimasukkan dalam amaun Tender ini:

The undersigned desires to be permitted to tender in due course, for the following work which the undersigned in the ordinary course of business directly carries out and for which Prime Cost or Provisional Sums have been included in the amount of this Tender:

.....

.....

.....

.....

---

* Petender dikehendaki memotong yang tidak berkenaan.
The tenderer to delete whichever is not applicable

Dokumen Meja Terkawal

6. Bahawasanya adalah diketahui bahawa Kerajaan sentiasa berhak menyetujuterima atau menolak Tender ini, sama ada ianya lebih rendah atau lebih tinggi daripada tender-tender yang lain, atau sama amaunnya. Yang bertandatangan di bawah ini bersetuju yang Tender ini akan berterusan sah dan tidak akan ditarik balik dalam tempoh sembilan puluh (90) hari dari tarikh akhir yang ditetapkan bagi penyerahan tender dan bersetuju bahawa tiada apa-apa had, syarat atau janjian lain akan dikenakan oleh kami selepas tarikh tersebut.

Whereas it is understood that the Government reserves the right to accept or to refuse this Tender, whether it be lower or higher than any other tender, or of the same amount. The undersigned agrees that this Tender shall remain valid and shall not be withdrawn within ninety (90) days from the final date fixed for the submission of tenders and agrees that no other term, condition or stipulation shall be imposed by us after the said date.

7. Yang bertandatangan di bawah ini berniat, jika Tender ini disetujuterima, memilih salah satu daripada bentuk Bon Pelaksanaan seperti berikut:

The undersigned intends, in the event of acceptance of this Tender, to choose one of the following form of Performance Bond:

*(i) Jaminan Bank / Bank Islam / Bank Pembangunan Malaysia Berhad (BPMB) / Bank Perusahaan Kecil dan Sederhana Malaysia (Bank SME) atau
Bank / Islamic Bank / Bank Pembangunan Malaysia Berhad (BPMB) / Bank Perusahaan Kecil dan Sederhana Malaysia (SME Bank) Guarantee or

*(ii) Jaminan Syarikat Kewangan atau
Finance Company Guarantee or

*(iii) Jaminan Insurans/Takaful atau
Insurance/Takaful Guarantee or

*(iv) Wang Jaminan Pelaksanaan yang dikenakan potongan sebanyak sepuluh peratus (10%) daripada setiap bayaran interim sehingga mencapai jumlah lima peratus (5%) daripada Jumlah Harga Kontrak.
Performance Guarantee Sum whereby ten percent (10%) of each interim payment shall be deducted until the total amount deducted aggregate to a sum equivalent to five percent (5%) of the Contract Sum.

8. Yang bertandatangan di bawah ini bersetuju, jika Tender ini disetujuterima, mendeposit, dengan seberapa segera yang praktik selepas penerimaan Surat Setujuterima Tender tetapi sebelum bermulanya Kerja, perkara-perkara berikut:

The undersigned agrees, in the event of acceptance of this Tender, to deposit as soon as is practicable after the receipt of the Letter of Acceptance of Tender but before the commencement of the Works, the following:

(a) Bon Pelaksanaan (jika petender memilih kaedah Jaminan Bank / Bank Islam / BPMB / Bank SME / Insurans / Takaful atau Syarikat Kewangan sahaja) dan jikalau gagal dikemukakan pada tarikh milik tapak, Kerajaan berhak untuk melaksanakan kaedah Wang Jaminan Pelaksanaan;
Performance Bond (if the tenderer opts for Bank / Islamic Bank / BPMB / SME Bank / Insurance / Takaful or Finance Company Guarantee) and failure to submit the said bond by the date of possession of site shall entitle the Government to implement the Performance Guarantee Sum option;

---

* Petender dikehendaki memotong yang tidak berkenaan.
The tenderer to delete whichever is not applicable.

(b) Polisi Insurans Tanggungan Awam (iaitu insurans terhadap bencana kepada orang-orang dan kerosakan kepada harta) atau Nota Liputan berserta dengan resit bagi premium yang telah dibayar;
Insurance Policy for Public Liability (ie. insurance against injury to persons and damage to property) or the Cover Note together with receipt of premium paid in respect thereof;

(c) Polisi Insurans Kerja atau Nota Liputan berserta dengan resit bagi premium yang telah dibayar;
Insurance Policy for Works or the Cover Note together with receipt of premium paid in respect thereof;

(d) Nombor pendaftaran di bawah Skim Keselamatan Sosial Pekerja (PERKESO);
Registration number under Employee's Social Security (SOCSO) Scheme;

Yang bertandatangan di bawah ini selanjutnya bersetuju mendeposit Polisi-polisi Insurans yang berkenaan dalam tempoh tidak lewat daripada tiga puluh (30) hari selepas Nota Liputan diserahkan.
The undersigned further agrees to deposit the relevant Insurance Policies within a period of not later than thirty (30) days after the Cover Notes has been submitted.

9. Yang bertandatangan di bawah ini bersetuju jika kerja-kerja gagal dimulakan dalam tempoh dua (2) minggu dari tarikh milik tapak, pengambilan kerja di bawah kontrak akan ditamatkan sejajar dengan Fasal 51.1(a)(i) Syarat-Syarat Kontrak.
The undersigned agrees that if the undersigned fails to commence works within two (2) weeks from the date of possession, his employment under the Contract shall be terminated in accordance with Clause 51.1(a)(i) of the Conditions of Contract.

10. Yang bertandatangan di bawah ini dengan ini juga bersetuju bahawa Borang Tender ini berserta Surat Setujuterima Tender (jika ada) hendaklah menjadi kontrak yang mengikat antara kita.
The undersigned hereby also agrees that this Form of Tender together with the Letter of Acceptance of Tender (if any) shall constitute a binding contract between us.

11. Yang bertandatangan di bawah ini mengesahkan, selepas menyemak sendiri, bahawa dokumen-dokumen dan pelan-pelan yang digunakan oleh yang bertandatangan di bawah ini untuk menyusun Tender ini adalah salinan-salinan yang sebenarnya bagi dokumen-dokumen dan pelan-pelan yang dimasukkan dalam Dokumen Meja Tender.
The undersigned confirms, after a personal scrutiny, that the documents and drawings used by the undersigned in compiling this Tender are true copies of the documents and drawings included in the Tender Table Documents.

12. Yang bertandatangan di bawah ini bersetuju bahawa:
The undersigned agrees that:

(a) jika Tender ini ditarik balik sebelum tamatnya Tempoh Sah Tender atau apa-apa tempoh lanjutan, atau
if this Tender is withdrawn before the expiry of the Tender Validity Period or any extended period thereof, or

(b) jika yang bertandatangan di bawah ini mengenakan apa-apa had, syarat atau janjian tambahan kepada Tender ini selepas tarikh akhir yang ditetapkan bagi penyerahan tender atau,
if the undersigned imposes any additional term, condition or stipulation to the Tender after the final date fixed for the submission of tenders or,

Dokumen Meja Terkawal

(c) jika sekiranya Tender telah disetujuterima, yang bertandatangan di bawah ini enggan dan tidak melaksanakan Perjanjian Kontrak yang formal atau mendeposit Bon Pelaksanaan (jika petender memilih kaedah Jaminan Bank / Bank Islam / Bank Pembangunan Malaysia Berhad (BPMB) / Bank Perusahaan Kecil dan Sederhana Malaysia (Bank SME) / Insurans/ Takaful atau Syarikat Kewangan sahaja) sebagaimana dikehendaki oleh Syarat-Syarat Kontrak atau tidak meneruskan Kerja, maka, dalam mana-mana hal itu, tanpa menyentuh apa-apa hak lain yang ada padanya, Kerajaan sentiasa berhak mengambil tindakan tatatertib terhadap yang bertandatangan di bawah ini atau membatalkan pendaftaran yang bertandatangan di bawah ini sebagai kontraktor Kerajaan, sebagaimana difikirkan perlu oleh Kerajaan.
in the event that the Tender having been accepted, the undersigned refuses and fails to execute the formal Contract Agreement or to deposit the Performance Bond (if the tenderer opts for Bank / Islamic Bank / Bank Pembangunan Malaysia Berhad (BPMB) / Bank Perusahaan Kecil dan Sederhana Malaysia (SME Bank) /Insurance/Takaful or Finance Company Guarantee) as required by the Conditions of Contract or fails to proceed with the Works, then, in any of such event, without prejudice to any other rights it may possess, the Government reserves the right to take disciplinary action against the undersigned or to cancel the registration of the undersigned as a Government contractor, as the Government deems fit.

Bertarikh pada..... haribulan..... 20.....
Dated this day of 20

.....
Tandatangan Petender
Signature of Tenderer

Nama Penuh : .....
Name in full

Atas sifat : .....
In the capacity of

yang diberikuasa dengan sempumanya untuk menandatangani Tender ini untuk dan bagi pihak:
duly authorised to sign this Tender for and on behalf of:

.....
Meterai atau cap Petender
Tenderer's seal or chop

Saksi : .....
Witness

Nama Penuh : .....
Name in full

Pekerjaan : .....
Occupation

Alamat : .....
Address
.....

SYARAT-SYARAT MEMBUAT TENDER
(CONDITIONS OF TENDERING)

1. Keseluruhan Kerja yang dinyatakan dalam Dokumen Tender yang ditunjukkan di atas Meja Tender (kemudian dari ini disebut "Dokumen Meja Tender") akan diberi secara Kontrak.
The whole of the Works set forth in the Tender Documents exhibited on the Tender Table (hereinafter referred to as the "Tender Table Documents") will be let on Contract.

2. (a) Tiap-tiap petender mestilah menyerahkan, dalam suatu sampul surat bertutup dan bermeterai yang dialamatkan sebagaimana ditetapkan dalam Notis Tender, suatu tender yang sah dalam Borang Tender yang diperuntukkan, bersama dengan salinan Senarai Kuantiti yang diisi dan ditandatangani dengan sempurnanya. Borang Tender yang tak lengkap atau tak bertandatangan akan ditolak.
Each tenderer must submit, enclose and seal in an envelope addressed as stipulated in the Tender Notice, a genuine tender on the Form of Tender provided, together with the copy of the Bills of Quantities duly filled in and signed. Form of Tender which is incomplete or unsigned shall be disqualified.

(b) Tiap-tiap petender mestilah mencatitkan, dalam ruang yang diperuntukkan dalam Borang Tender, masa yang akan dikehendakinya bagi menyiapkan Kerja itu.
Each tenderer must enter, in the space provided on the Form of Tender, the time he will require to complete the Works.

(c) Petender hendaklah meletakkan harga dalam Senarai Kuantiti yang hendaklah diisi dengan dakwat dan ditandatangani dengan sempurnanya oleh petender. Sebelum Surat Setujuterima dikeluarkan, harga atau kadar harga dalam Senarai Kuantiti hendaklah diteliti dan diselaraskan oleh Pegawai Penguasa dengan memastikan kemunasabahannya tanpa mengubah amaun yang dinyatakan di dalam Borang Tender.
The tenderer shall price the Bills of Quantities which shall be duly filled in ink and signed by the tenderer. Before the issuance of the Letter of Acceptance, prices or rates in the Bills of Quantities shall be scrutinized and adjusted by the Superintending Officer as to its reasonableness without altering the amount as stated in the Form of Tender.

3. Jika mana-mana petender:
Should any tenderer:

(a) menarik balik tendernya sebelum tamat Tempoh Sah Tender atau apa-apa tempoh lanjutan, atau
withdraw his tender before the expiry of the Tender Validity Period or any extended period thereof, or

(b) mengenakan had, syarat atau janjian tambahan selepas tarikh akhir yang ditetapkan bagi penyerahantender (dan dalam hal yang sedemikian ianya hendaklah disifatkan sebagai penarikan balik tender ini), atau
impose additional terms, conditions or stipulations after the final date fixed for the submission of tenders (in which case it shall be deemed to be a withdrawal of this tender), or

Dokumen Meja Terkawal

(c) jika sekiranya tender telah disetujuterima, enggan dan tidak melaksanakan Perjanjian Kontrak yang formal atau mendeposit Bon Pelaksanaan (jika petender memilih kaedah Jaminan Bank / Bank Islam / Bank Pembangunan Malaysia Berhad (BPMB) / Bank Perusahaan Kecil dan Sederhana Malaysia (Bank SME) / Insurans/ Takaful atau Syarikat Kewangan sahaja) atau tidak meneruskan Kerja;
whose tender has been accepted, refuse and fail to execute the formal Contract Agreement or to deposit the Performance Bond (if the tenderer opts for Bank / Islamic Bank / Bank Pembangunan Malaysia Berhad (BPMB) / Bank Perusahaan Kecil dan Sederhana Malaysia (SME Bank) /Insurance/Takaful or Finance Company Guarantee) or fails to proceed with the Works;

maka, dalam mana-mana hal itu, Kerajaan hendaklah, tanpa menyentuh apa-apa hak lain yang ada padanya, sentiasa berhak mengambil tindakan tatatertib terhadap yang bertandatangan di bawah ini atau membatalkan pendaftaran petender sebagai kontraktor Kerajaan, sebagaimana difikirkan perlu oleh Kerajaan.
then, in any of such events, the Government, without prejudice to any other rights it may possess, reserves the right to take disciplinary action against the undersigned or to cancel the registration of the tenderer as a Government contractor, as the Government deems fit.

4. Tiada apa-apa perubahan atau tambahan yang tidak dibenarkan boleh dibuat kepada Borang Tender atau mana-mana Dokumen Tender yang lain.
No unauthorised alteration or addition shall be made to the Form of Tender or any other Tender Documents.

5. (a) Tender-tender dan dokumen-dokumen berhubung dengannya yang dinyatakan dalam Klausa 2 di atas, mestilah diserahkan di tempat dan pada atau sebelum masa yang ditetapkan dalam Notis Tender bagi penyerahan tender.
Tenders and documents in connection therewith as specified in Clause 2 above, must be delivered to the place and at or before the time stipulated in the Tender Notice for the submission of Tenders.

(b) Jika sesuatu tender tidak diserahkan dengan tangan, petender mestilah menguruskan bagi tendernya dan dokumen-dokumennya yang lain dihantar dengan pos supaya sempat sampai di tempat yang ditetapkan tidak lewat dari masa yang ditetapkan.
In the case of a tender not being delivered by hand, the tenderer must arrange for his tender and other documents to be posted in time to reach the stipulated place not later than the stipulated time.

(c) Mana-mana tender yang diserahkan selepas masa yang ditetapkan, berbangkit dari apa jua sebab, tidak akan dipertimbangkan.
Any tender delivered after the stipulated time, from whatever cause arising, will not be considered.

(d) Tiada apa-apa jua perbelanjaan yang ditanggung oleh petender bagi menyediakan tendernya boleh dibayar kepadanya.
In no case will any expenses incurred by a tenderer in the preparation of his tender be allowed.

6. Jika sekiranya atas permintaannya, seseorang petender diberikan salinan-salinan sesuatu Dokumen Tender, maka adalah menjadi tanggungjawabnya seorang diri untuk meneliti salinan-salinan itu dan memuaskan hatinya bahawa salinan-salinan itu adalah sebenarnya salinan-salinan dokumen yang termasuk dalam Dokumen Meja Tender. Jika sekiranya terdapat apa-apa perbezaan atau percanggahan antara mana-mana salinan yang diberi kepada petender dengan salinan dalam Dokumen Meja Tender atau antara mana-mana dokumen yang termasuk di dalamnya, maka adalah menjadi tanggungjawabnya seorang diri untuk memohon secara bertulis kepada Pegawai Penguasa supaya dibetulkan perbezaan atau percanggahan itu tidak lewat dari tujuh (7) hari sebelum tarikh akhir yang ditetapkan dalam Notis Tender bagi penyerahan tender. Apa-apa jawapan yang hendak dibuat oleh Pegawai Penguasa atas permohonan itu hendaklah dibuat dengan cara Memorandum Tender yang hendaklah dihantar kepada semua petender. Memorandum Tender itu hendaklah menjadi sebahagian daripada Dokumen Tender dan Tender yang diterima akan disifatkan sebagai berdasarkan pada huraian, ubahsuaian atau perluasan kepada dokumen asal yang mengandunginya.

In the event of any tenderer being supplied at his request, with copies of any of the Tender Documents, it shall be the sole responsibility of the tenderer to scrutinize such copies and satisfy himself that they are exact copies of those included in the Tender Table Documents. In the event of any difference or discrepancy being found between any such copies supplied to the tenderer and those in the Tender Table Documents or between any documents included therein, it shall be the sole responsibility of the tenderer to apply in writing to the Superintending Officer, to have the difference or discrepancy rectified, not later than seven (7) days before the final date fixed in the Tender Notice for the submission of tenders. Any reply the Superintending Officer may make to such application shall be by way of a Tender Memorandum which will be sent to all tenderers. Such Tender Memorandum shall become part of the Tender Documents and Tenders received will be deemed to have been based on the explanations, modification or extension to the original document that they contain.

7. Petender hendaklah disifatkan telah memeriksa dan meneliti Tapakbina dan sekitarnya dan telah berpuas hati sebelum menyerahkan tendernya tentang jenis bumi dan lapisan tanah, bentuk dan jenis Tapakbina, takat dan jenis kerja, bahan dan barang yang perlu bagi menyiapkan Kerja, cara-cara perhubungan dengan dan akses ke Tapakbina, tempat tinggal yang mungkin dikehendaki dan pada amnya hendaklah mendapatkan sendiri segala maklumat yang perlu tentang risiko, luarjangka dan segala hal keadaan yang mempengaruhi dan menjejaskan tendemya.

The tenderer shall be deemed to have inspected and examined the Site and its surroundings and to have satisfied himself before submitting his tender as to the nature of the ground and sub-soil, the form and nature of the Site, the extent and nature of the work, materials and goods necessary for the completion of the Works, the means of communication with and access to the Site, the accommodation he may require and in general to have obtained for himself all necessary information as to risks, contingencies and all circumstances influencing and affecting his tender.

8. Tender-tender hendaklah terus sah selama tempoh sembilan puluh (90) hari dari tarikh akhir bagi penyerahan tender sebagaimana yang ditetapkan dalam Notis Tender (dalam Syarat-Syarat Membuat Tender ini disebut "Tempoh Sah Tender") dan tempoh ini boleh dengan persetujuan bersama dilanjutkan jika dan apabila perlu.

Tenders shall remain valid for a period of ninety (90) days from the final date for submission of tenders stipulated in the Tender Notice (herein referred to as the "Tender Validity Period") and such period may by mutual agreement be extended as and when necessary.

Dokumen Meja Terkawal

9. Kerajaan tidak boleh terikat menyetujuterima tender yang rendah sekali atau sesuatu tender dan juga tidak terikat untuk memberi apa-apa sebab atas penolakan sesuatu tender.
The Government shall not be bound to accept the lowest or any tender, nor to assign any reason for the rejection of any tender.

10. Petender yang berjaya (jika ada) hendaklah diberitahu tentang tendernya dengan surat (disebut "Surat Setujuterima Tender") dalam Tempoh Sah Tender atau apa-apa tempoh lanjutan. Petender tersebut hendaklah dengan seberapa segera yang praktik tetapi sebelum bermulanya Kerja mendeposit dengan Pegawai Penguasa, perkara-perkara berikut:
The successful tenderer (if any) shall be notified of his tender by a letter (referred to as "Letter of Acceptance of Tender") within the Tender Validity Period or any extended period thereof. The said tenderer shall as soon as is practicable but before the commencement of the Works deposit with the Superintending Officer the following:

(a) Bon Pelaksanaan (jika petender memilih kaedah Jaminan Bank / Bank Islam / Bank Pembangunan Malaysia Berhad (BPMB) / Bank Perusahaan Kecil dan Sederhana Malaysia (Bank SME) / Insurans/ Takaful atau Syarikat Kewangan sahaja) berjumlah sebanyak 5% daripada Jumlah Harga Kontrak dan jikalau gagal dikemukakan pada tarikh milik tapak, Kerajaan berhak untuk melaksanakan kaedah Wang Jaminan Pelaksanaan;
Performance Bond (if the tenderer opts for Bank / Islamic Bank / Bank Pembangunan Malaysia Berhad (BPMB) / Bank Perusahaan Kecil dan Sederhana Malaysia (SME Bank) /Insurance/Takaful or Finance Company Guarantee*) amounting to 5% of Contract Sum and failure to submit the said bond by the date of possession of site, shall entitle the Government to implement the Performance Guarantee Sum option;*

(b) Polisi Insurans Tanggungan Awam (iaitu insurans terhadap bencana kepada orang-orang atau kerosakan kepada harta) atau Nota Liputan berserta dengan resit bagi premium yang telah dibayar;
Insurance Policy for Public Liability (i.e. insurance against injury to persons or damage to property) or Cover Note together with receipt of premium paid in respect thereof,

(c) Polisi Insurans Kerja atau Nota Liputan berserta dengan resit bagi premium yang telah dibayar;
Insurance Policy for Works or Cover Note together with receipt of premium paid in respect thereof;

(d) Nombor pendaftaran di bawah Skim Keselamatan Sosial Pekerja (PERKESO);
Registration numbers under the Employee's Social Security (SOCSO) Scheme.

Petender tersebut hendaklah selanjutnya mendeposit Polisi-polisi Insurans yang berkenaan dalam tempoh tidak lewat daripada tiga puluh (30) hari selepas Nota Liputan diserahkan.
The said tenderer shall further deposit the relevant Insurance Policies within a period of not later than thirty (30) days after the Cover Notes has been submitted.

11. Semua jadual butir-butir yang dilampirkan kepada Dokumen Tender hendaklah diisi dan diserahkan oleh petender berserta dengan tendernya.
All schedules of particulars attached to the Tender Documents shall be completed and submitted by the tenderer together with his tender.

12. Tiap-tiap notis yang hendak diberi kepada petender bolehlah diposkan ke alamatnya yang dinyatakan dalam tender itu dan pengeposan itu hendaklah disifatkan sebagai penyampaian yang sempurna akan notis itu.
Every notice to be given to a tenderer may be posted to the tenderer's address given in the tender and such posting shall be deemed good service of such notice.

Dokumen Meja Terkawal

13. Perkataan "petender yang berjaya" hendaklah bererti bahawa petender yang mana tendernya telah diluluskan dan disetujuterima oleh Kerajaan.

The word "successful tenderer" shall mean that the tenderer whose tender has been approved and accepted by the Government.

14. Perkataan "petender" dalam Syarat-Syarat ini hendaklah disifatkan sebagai termasuk dua orang atau lebih.

The word "tenderer" in these conditions shall be deemed to include two or more persons.

15. Jika petender tidak mematuhi Syarat-Syarat tersebut di atas mengenai apa-apa jua hal maka tendernya boleh ditolak.

Non-compliance with the above conditions in any respect shall render the tender liable to rejection.

16. Syarat-Syarat Membuat Tender ini, setakat mana Syarat-Syarat itu mungkin menyentuh pelaksanaan Kontrak ini, hendaklah disifatkan menjadi sebahagian daripada Kontrak ini.

These Conditions of Tendering, in so far as they affect the execution of the Contract, shall be deemed to form part of the Contract.

Dokumen Meja Terkawal

BORANG MAKLUMAT PENENDER

Dokumen Meja Terkawal

BORANG A – SURAT PENGAKUAN KEBENARAN MAKLUMAT DAN KEESAHAN DOKUMEN YANG DIKEMUKAKAN OLEH PETENDER

Nama Kontraktor: .....

Alamat : .....

.....

.....

Kepada,

Ketua Jabatan,
.....,
.....,
.....,
Jalan Sultan Alam Shah,
42700 Banting, Selangor

(Pihak yang akan menilai Sebut Harga)

Tuan,

Maklumat Latar Belakang, Kewangan dan Teknikal Petender

1. Kami telah membaca dengan teliti semua arahan-arahan yang terkandung dalam Arahan Kepada Petender termasuk arahan yang menghendakkan kami mengemukakan maklumat-maklumat dan dokumen-dokumen mengenai perkara di atas bersama-sama dokumen tender kami semasa mengemukakan Tender ini untuk membolehkan Jabatan menilai keupayaan kami untuk melaksanakan kerja yang ditender, semasa penilaian Tender.

2. Kami faham dan mengambil maklum bahawa penilaian Tender ini akan mengambilkira dan mementingkan keupayaan kami melaksanakan kerja yang ditender. Justeru itu tender kami akan hanya dipertimbang untuk diperakukan kepada Lembaga Tender untuk disetujuterima sekiranya kami didapati berkeupayaan untuk melaksanakan projek yang ditender, mengikut penilaian Jabatan berasaskan maklumat-maklumat dan dokumen-dokumen yang kami kemukakan.

3. Kami juga mengambil maklum bahawa kami dikehendakki mengemukakan semua maklumat dan dokumen-dokumen yang diminta bersama-sama tender kami sebelum Tender ditutup dan maklumat-maklumat atau dokumen-dokumen yang dikemukakan kemudian daripada itu tidak akan diterima untuk diambilkira dalam penilaian keupayaan kami.

4. Kami mengaku bahawa maklumat-maklumat dan data-data yang kami berikan bersama-sama ini di Borang B, C, CA, D, E, F, G & GA dan dokumen-dokumen yang kami sertakan bersamanya setahu kami adalah semuanya benar dan sah pada semua segi dan kami telah mengambil maklum dan sedar akan tindakan yang boleh diambil oleh Majlis terhadap kami dan/atau tender kami, sekiranya mana-mana maklumat, data-data dan dokumen yang kami berikan itu didapati tidak benar atau palsu.

Dokumen Meja Terkawal

5. Kami juga mengambil maklum dan sedar bahawa Tender kami akan ditolak (disqualified) dan tidak akan dipertimbangkan sekiranya maklumat-maklumat yang kami berikan tidak mencukupi atau sekiranya kami gagal untuk memberikan bersama-sama ini mana-mana maklumat dan/atau menyertakan mana-mana dokumen penting yang sangat diperlukan untuk membolehkan Jabatan menilai keupayaan kami, terutamanya dokuman-dokumen berhubung dengan kedudukan kewangan dan prestasi kerja semasa kami seperti berikut:

   (a) Salinan Akaun Syarikat yang telah disahkan dan diaudit oleh Juru Audit yang bertauliah, bagi dua (2) tahun kewangan terakhir.

   (b) Salinan Penyata Bulanan Akaun Bank mengenai Wang Dalam Tangan penyebut harga bagi tiga (3) bulan terakhir sebelum tarikh tutup Sebut Harga.

   (c) Laporan Penyelia Projek atas prestasi kerja semasa yang bukan projek Jabatan atas Borang GA, dalam satu sampul berlakri bagi setiap kerja semasa yang sedang dilaksanakan.

6. Kami dengan ini memberi kuasa kepada mana-mana pegawai Majlis, jurutera-jurutera projek, bank dan institusi kewangan lain dan lain-lain atau mana-mana orang atau firma yang berkenaan untuk memberikan maklumat-maklumat yang dianggap perlu dan diminta oleh Jabatan untuk menyemak maklumat-maklumat yang kami berikan atau untuk mendapatkan maklumat tambahan. Kami mengambil maklum bahawa pihak Jabatan juga boleh merujuk apa-apa maklumat yang kami kemukakan dengan mana-mana pihak termasuk Jabatan Hasil Dalam Negeri. Walau bagaimanapun kami tetap bertanggungjawab di atas maklumat-maklumat dan dokumen-dokumen yang kami berikan bersama-sama ini.

Yang Benar,

…… Tarikh :…….
(Tandatangan Petender)

Nama Penuh: …….
No. Kad Pengenalan …….

Atas Sifat …….
Yang diberi kuasa dengan sempurnanya untuk menandatangani Tender ini untuk dan bagi pihak:

……
(Meteri atau Cap Petender)

Saksi: …… Tarikh :…….

Nama Penuh: ……..
No. Kad Pengenalan …….
Pekerjaan …….
Alamat ……..
……..

Dokumen Meja Terkawal

BORANG B – MAKLUMAT AM LATAR BELAKANG PETENDER

1. Nama: ……

2. Alamat:……

   ……

   ……

   No. Telefon: …….. No. Fax: ……..

3. Pendaftaran dengan Sijil Perolehan Kerja Kerajaan (SPKK) (Sertakan Salinan Pendaftaran)

   (a) No. Pendaftaran: ……

   (b) Tarikh daftar: ……. Sah hingga: …….

   (c) Kod bidang: ……..

   ……..

   (d) Taraf (Bumiputera/Bukan Bumiputera): ……

   (e) Jika Bumiputera, tempoh sah taraf : Dari …… hingga ……

4. Bagi Syarikat Sdn Bhd. nyatakan:

   (a) Modal dibenarkan : RM……

   (b) Modal dibayar : RM……

5. Perniagaan Utama lain, jika ada :

   (a) ……..…… sejak ……..

   (b) ……..…… sejak ……..

6. Ahli-ahli Syarikat

   (a) Ahli-ahli Lembaga Pengarah

Nama	Jawatan	Saham Modal Dipegang

Dokumen Meja Terkawal

(a) Ahli-ahli Lembaga Pengarah (Samb.)

Nama	Jawatan	Saham Modal Dipegang

(b) Ahli-ahli Pengurusan

Nama	Jawatan	Kelulusan Akademik/Iktisas

Dokumen Meja Terkawal

BORANG C – DATA-DATA KEWANGAN

A. Ringkasan harta dan liabiliti seperti yang ditunjukkan dalam Lembaran Imbangan (Balance Sheet)* yang diaudit bagi tahun kewangan terakhir.

Asset * (A)	Liabiliti * (B)	Nilai Kewangan (Worth) (A - B)
Semasa: RM Tetap : RM ---------- Jumlah : RM ==========	Semasa: RM Tetap : RM ---------- Jumlah : RM ==========	Modal Pusingan : RM Modal Tetap : RM 'Nett Worth' : RM

B. Akaun Wang Ditangan (Cash in Hand)**

1. Nama dan Alamat Bank di mana akaun dibuka:
   .....
   .....

2. Nombor Akaun: .....

C. Kemudahan kredit dalam bentuk mudah cair (jika ada)+

1. Nama dan Alamat bank/ Institusi Kewangan yang memberi Kemudahan kredit:
   .....
   .....

2. Bentuk dan baki amaun kemudahan kredit dalam bentuk mudah cair yang boleh digunakan untuk projek pembinaan.

(i)	Overdraf atau Talian Kredit	:	RM
(ii)	Overdraf bercagar	:	RM
(iii)	Pinjaman Tetap yang akan/layak diperolehi untuk projek	:	RM
(iv)	Surat Jaminan Kredit (Letter of Credit (LC))	:	RM
(v)	.....	:	RM ----------
			RM
			==========

Peringatan penting

* Sila sertakan salinan Akaun Syarikat bagi dua (2) tahun kewangan terakhir, yang disahkan dan diaudit ole Juru Audit bertauliah (certified Accountant) atau sekiranya tiada, bagi tahun kewangan setahun sebelumnya bagi meyokong data-data yang diberi. Tender yang tidak disertakan dengan Akaun ini akan ditolak.

** Sila sertakan salinan Penyata Bulanan Bank bagi tiga (3) bulan terakhir sebelum tarikh tutup Tender. Tender yang tidak disertakan dengan penyata ini akan ditolak.

\+ Sila dapat dan sertakan Laporan sulit daripada pihak Bank/Institusi Kewangan atas format seperti Borang CA, dalam satu sampul berlakri.

Dokumen Meja Terkawal

SULIT

BORANG CA – LAPORAN BANK/INSTITUSI KEWANGAN MENGENAI KEDUDUKAN KEWANGAN PETENDER

(Borang ini hendaklah dilengkapkan oleh pihak bank atau institusi kewangan lain dan diserahkan kepada petender dalam satu sampul berlakri untuk disertakan bersama-sama tendernya sekiranya petender mempunyai kemudahan kredit dalam bentuk mudah cair dengan Bank/Institusi Kewangan yang berkenaan)

Kepada: .....
.....,
.....,
.....
.....
.....

Nama Petender: .....

Projek: Tender untuk ..... .

(A) Kemudahan Kredit Dalam Bentuk Mudah Cair yang boleh digunakan untuk pelaksanaan Projek : Kemudahan Kredit yang telah diluluskan dan kemudahan kredit tambahan minimum yang layak diperolehi oleh petender adalah seperti berikut:

	Bentuk Kemudahan Kredit	BAKI dpd yang telah diluluskan	Tambahan Minimum yang akan diluluskan*	Jumlah
	.....	.....	.....	.....
(i)	Overdraf	RM	RM	RM
(ii)	Overdraf bercagar	RM	RM	RM
(iii)	Talian Kredit	RM	RM	RM
(iv)	Pinjaman Tetap yang akan/ layak diperolehi untuk projek			RM
(v)	Surat Jaminan Kredit (Letter of Credit LC)	RM	RM	RM
(vi)	.....	RM	RM	RM
		.....	.....	.....
Jumlah		RM	RM	RM
		.....	.....	.....

(* Jika Projek diawadkan kepada Pentender)

(B) Ulasan-ulasan mengenai kedudukan kewangan dan akaun petender:

Tandatangan untuk dan bagi pihak bank: .....

Nama Bank: .....
Meteri Bank:

Nama Pegawai: .....
Jawatan: .....
Tarikh: .....

BORANG D – REKOD PENGALAMAN KERJA
(Senarai semua kerja yng disiapkan+ dalam 5 tahun lepas)

Bil.	Nama Kontrak/Projek +	Nilai Kontrak (RM)	Nilai Pentender* Bertanggung-jawab	Tempoh Kontrak **	Tarikh Milik Tapak	Tarikh Siap Kontrak	Tarikh Siap Sebenar	Nama dan Alamat Pegawai Penguasa/ Jurutera Perunding	Nama dan Alamat Majikan

\+ Salinan Perakuan/Pengesahan Siap Kerja bagi setiap kerja yang disenaraikan hendaklah disertakan.
* Hanya perlu diisi sekiranya pentender melaksanakan kerja sebagai ahli syarikat gabungan.
** Tempoh Kontrak hendaklah termasuk lanjutan masa yang diluluskan.

Dokumen Meja Terkawal

BORANG E – KAKITANGAN TEKNIKAL
(Butir-butir Kakitangan Teknikal Yang Ada Dalam Penggajian Penyebut harga Masa Kini)

*Nama dan No. K/P	Umur	Kelulusan Professional/ Pendidikan**	Tahun Kelulusan	Tarikh Diambil Bekerja	Jawatan yang Disandang/Tugas-Tugas semasa	Pengalaman Lepas (Jawatan disandang, nama projek dan majikan dan tempoh bekerja dan sebagainya)
1.						
2.						
3.						
4.						
5.						
6.						
7.						
8.						
9.						
10.						

* Salinan Borang KWSP 'A' setiap pekerja bagi bulan caruman terakhir dan salinan perjanjian perkhidmatan ahli professional yang diambil khidmat secara kontrak hendaklah disertakan.

** Sila sertakan salinan sijil kelulusan atau sijil keahlian Badan-badan Professional.

Dokumen Meja Terkawal

BORANG F – KEEMPUNYAAN LOJI DAN PERALATAN PEMBINAAN UTAMA
(Senarai Loji dan Peralatan Pembinaan Utama kepunyaan penyebut harga yang sesuai yang boleh digunakan untuk projek)

Bil.	Butiran (Jenis, model, buatan dan keupayaan/saiz)	Dimiliki, Disewa-beli Atau Disewapajak*	Bilangan Setiap satu	Nilai Semasa (RM)	Umur (dari tarikh belian asal)	Tempat simpanan/ digunakan sekarang	Catatan
A.	Loji dan Peralatan Asas **						
B.	Loji dan Peralatan lain						

* Salinan kad pendaftaran dan/atau dokumen-dokumen lain bukti keempunyaan hakmilik penyebut harga atau perjanjian sewabeli/sewapajak atas setiap Loji dan Peralatan yang disenaraikan hendaklah disertakan.

** Pegawai yang menyediakan Dokumen Sebut harga hendaklah menyenaraikan butiran-butiran Loji dan Peralatan Asas bagi projek berkenaan (tanpa bilangan AKW).

Dokumen Meja Terkawal

BORANG G – SENARAI KERJA KONTRAK SEMASA
(Senarai semua kerja di dalam tangan/ sedang berjalan dan belum siap termasuk kontrak yang baru diawad)

Bil.	Nama Kontrak/ Projek +	Nilai Kontrak (RM)	Nilai Pentender* Bertanggung-jawab	Tempoh Kontrak **	Tarikh Milik Tapak	Tarikh Siap Kontrak	Kemajuan Kerja Ikut Jadual (%)	Kemajuan Kerja Sebenar Dicapai (%)	Nama dan Alamat Pegawai Penguasa/ Jurutera Perunding	Nama dan Alamat Majikan

* Hanya perlu diisi sekiranya pentender melaksanakan kerja sebagai ahli syarikat gabungan.
** Tempoh Kontrak hendaklah termasuk lanjutan masa yang diluluskan.

\+ Peringatan Penting
Bagi setiap kerja semasa yang bukan projek MDKL, sertakan (wajib) Laporan Penyelia Projek atas format seperti Borang GA, dalam satu sampul berlakri. Tender yang tidak disertakan dengan Laporan ini bagi setiap kerja semasa yang disenaraikan, akan ditolak.

Dokumen Meja Terkawal

Dokumen Meja Terkawal

SULIT

BORANG GA – LAPORAN PENYELIA PROJEK ATAS PRESTASI KERJA (BUKAN PROJEK JABATAN) SEMASA PETENDER

(Borang ini hendaklah dilengkapkan oleh Penyelia Projek atau Pembantu Kanannya yang mengawasi projek dan diserahkan kepada Kontraktor dalam satu sampul berlakri untuk disertakan bersama-sama tendernya)

Kepada: .....
.....
.....
Persiaran Majlis,
Jln Sultan Alam Shah, Banting,
42700, Selangor

Nama Kontraktor: .....
Nama Projek Yang Dilaksanakan .....
.....

No. Kontrak :

Harga Kontrak (termasuk anggaran nilai kerja perubahan) : RM .....
Wang Kos Prima dan Peruntukan Sementara : RM .....
Nilai Kerja Pembina : RM .....

Tarikh Milik Tapak : ..... Tempoh Kontrak: ..... minggu
Tarikh Penyiapan Asal : .....

Lanjutan Masa Yang Telah Diluluskan : ..... hari

Lanjutan Masa Seterusnya:
Yang difikir/ dijangka layak diperakukan : ..... hari
Atas Sebab-sebab : (i) .....
(ii) .....

Kemajuan Kerja (berdasarkan nilaian kerja yang telah dilaksanakan):
Pencapaian sebenar: ..... % Mengikut Jadual: ..... %
Tarikh Kerja dijangka akan dapat disiapkan: .....

Nilai Bahagian Kerja Yang Telah Siap : RM .....
Nilai Baki Kerja Yang Belum Siap : RM .....

Ulasan-ulasan mengenai Prestasi Kontraktor:
(Nyatakan apa-apa kepujian dan/atau kelemahan kontraktor dan juga apa-apa tindakan/perakuan yang diambil/dipertimbang berhubung dengan prestasi Kontraktor melaksanakan Kontrak)

Tandatangan Penyelia Projek : .....

Nama : .....
Jawatan : ..... Tarikh: .....

Dokumen Meja Terkawal

SENARAI KUANTITI

Dokumen Meja Terkawal

MAJLIS DAERAH KUALA LANGAT

MDKL/JK/T : 05/19

CADANGAN MENAIKTARAF RUANG PETAK PENIAGA SERTA KERJA-KERJA BERKAITAN DI BANGUNAN PASAR AWAM BANTING, KUALA LANGAT.

Pendahuluan :

A. Kerja yang diliputi dalam kontrak ini mengandungi peruntukan oleh kontraktor dengan risiko dan kosnya sendiri bagi semua bahan-bahan, peranca-peranca, peralatan, loji, pekerja, pengangkutan dan lain-lain perkara yang perlu untuk pembinaan dan penyiapan kerja diatas mengikut spesifikasi, pelan dan kelulusan sepenuhnya oleh Pegawai Penguasa.

B. **Majlis berhak** mengubah mana-mana kuantiti yang tercatit didalam Ringkasan Sebutharga yang dinyatakan.

C. Kuantiti yang tercatat didalam Ringkasan Sebutharga ini adalah kuantiti sementara sahaja.

D. Singkatan-singkatan adalah seperti berikut :-

M - Meter Panjang | **M² - Meter Persegi** | **M³ - Meter Padu**
No - Bilangan | **J.P - Jumlah Pukal** | **P.S. - Provosional**

Butiran	Perihal Kerja	Unit	Kuantiti	Kadar (RM)	Jumlah (RM)
	Nota :				
A	Pemborong dikehendaki menjalankan kerja di atas dengan sistematik dan tidak merosakkan harta benda lain yang berdekatan dengannya.	-	-	-	-
B	Pemborong juga bertanggungjawab terhadap segala pembersihan di tapak semasa dan selepas menjalankan kerja mengikut arahan P.P.	-	-	-	-
C	Pemborong dikehendaki menyediakan keselamatan terhadap orang awam dan pekerja-pekerja secukupnya.	-	-	-	-
D	Pemborong adalah bertanggungjawab membaiki jalan-jalan, parit, bangunan atau yang berkaitan sekiranya berlaku kerosakan semasa atau selepas pembinaan dijalankan kepada keadaan sediada.	-	-	-	-
E	Pemborong hendaklah mengisi segala butiran di dalam dokumen ini dengan lengkap seperti di dalam ruangan Maklumat, Petender, Borang Kontrak, Senarai Kuantiti dan sebagainya. Kegagalan Pemborong mematuhi syarat-syarat yang diterangkan seperti di dalam Arahan Kepada Petender dan lain-lain yang berkaitan,maka Majlis BERHAK MENOLAK tawarannya.	-	-	-	-
F	Sebarang butiran yang tidak dihargakan adalah dianggap telah dimasukkan ke dalam harga butiran lain.	-	-	-	-

Dokumen Meja Terkawal

Butiran	Perihal Kerja	Unit	Kuantiti	Kadar Harga	Amaun (RM)
1.0	**KEHENDAK PERMULAAN DAN SYARAT AM**				
1.1	Kerja-kerja awalan untuk kerja pelarasan dengan lain-lain jabatan teknikal (TNB & AIR SELANGOR), pembersihan rizab dan lain-lain kerja yang berkaitan di dalam PERMULAAN.	J.P.	-	-	
1.2	Keperluan-keperluan di dalam syarat-syarat sebutharga:				
	a) Insurans untuk Semua Risiko Kontraktor (CAR)	J.P.	-	-	
	b) Insurans Pampasan Pekerja	J.P.	-	-	
1.3	Laporan bergambar sebanyak sekurang-kurangnya 36 keping.	Set	2		
1.4	Soft Copy Dalam Bentuk CD / Thumbdrive	Set	1		
1.5	Membekal dan memasang papan tanda projek seperti di dalam pelan yang dilampirkan. a) 3,500mm x 2,000mm (Kerja-Kerja Tender) (Drawing No : MDKL/JL/P.T.P/TYPE A/01)	No	1		
1.6	Mengemas, membersih dan membaiki apabila kerja siap sepenuhnya	J.P.	-	-	
1.7	Melantik Jurukur bertauliah bagi kerja-kerja seperti berikut dan mengemukakan pelan kepada Pegawai Penguasa:				
	a) 3 Set Pelan Ukur Aras Sediada	J.P.	-	-	
	b) 3 Set Pelan Cadangan 'Proposed Plan'	J.P.	-	-	
	c) 3 Set Pelan Ukur Aras Siap Dibina 'As Built Plan'	J.P.	-	-	
	Jumlah Dikumpulkan.				

Dokumen Meja Terkawal

Butiran	Perihal Kerja	Unit	Kuantiti	Kadar Harga	Amaun (RM)
2.0	**KERJA PEMBERSIHAN TAPAK**				
	Membekal segala peralatan, jentera, pekerja dan lain-lain bagi kerja-kerja membersih dan memindahkan segala bahan yang tidak dikehendaki ke tempat buangan kontraktor sendiri sebelum dan selepas kerja disiapkan seperti yang diarahkan oleh Pegawai Penguasa.				
2.1	Membekal segala peralatan, pekerja, jentera dan lain-lain bagi kerja-kerja meroboh struktur dinding dan meja konkrit sediada, membersih, mengangkut, membuang sisa pecahan konkrit dan memindah bahan binaan yang boleh digunapakai seperti berikut :	M^3	180		
2.2	Kerja-kerja membekal dan memasang hoarding dari jenis *tarpaulin canvas* pada ketinggian 1.8m termasuk kayu penyokong dan dipasang mengelilingi tapak pembinaan serta kerja-kerja membuka semula setelah projek disiapkan. a. 220m panjang x 1.8m tinggi	J.P.	-	-	
3.0	**KERJA PENYEDIAAN RUANG NIAGA SEMENTARA**				
3.1	Kerja-kerja membekal dan memasang struktur khemah dengan bumbung dari jenis kanvas berukuran 20' x 20' mengikut pelan yang dilampirkan dan diletakkan di lokasi yang ditetapkan oleh Pegawai Penguasa serta kerja-kerja membuka semula setelah projek disiapkan.	No	25		
3.2	Kerja-kerja menyediakan sistem perpaipan sementara menggunakan 25mm dia. paip bekalan air jenis polietilena termasuk kepala paip dan meter sediada bagi setiap petak (100 petak) serta perkakasan penyambungan yang berkaitan. (400m)	J.P.	-	-	
3.3	Kerja-kerja menyediakan sistem bekalan elektrik sementara untuk 25 unit khemah termasuk penyediaan 2 unit lampu kalimantang bagi setiap khemah serta kerja-kerja pendawaian elektrik dan pengujian.	No	25		
	Jumlah Dikumpulkan.				

Dokumen Meja Terkawal

Butiran	Perihal Kerja	Unit	Kuantiti	Kadar Harga	Amaun (RM)
4.0	**KERJA-KERJA MEMBINA LANTAI KONKRIT**				
4.1	Kerja-kerja memotong lantai konkrit bertetulang sediada termasuk kerja-kerja memecah dan mengorek konkrit pada kedalaman yang ditetapkan seperti di dalam pelan yang dilampirkan dan arahan Pegawai Penguasa.				
	a. 150m panjang x 0.25m lebar x 0.45m dalam	M^3	14		
4.2	Kerja-kerja membina 150mm tebal 'concrete slab' menggunakan konkrit siap bancuh 'Ready Mix' G25 termasuk 1 lapisan BRC A6 dan kerja-kerja acuan konkrit.				
	a. 150m x 12m	M^2	1,800		
4.3	Membekal dan memasang 300mm x 300mm x 8mm tebal kemasan jubin dari jenis berkekaca seramik penghalang gelincir serta 20mm tebal lapisan skrid dan kerja-kerja berkaitan mengikut spesifikasi yang telah ditetapkan.	M^2	1,800		
5.0	**KERJA-KERJA MEMBINA RUANG PETAK PENIAGA**				
5.1	Kerja-kerja membina 113mm tebal dinding bata campuran simen dan pasir (1:3) termasuk kerja-kerja melepa pada permukaan dinding.	M^2	800		
5.2	Kerja-kerja membekal 75mm tebal 'concrete slab' menggunakan konkrit siap bancuh 'Ready Mix' G25 termasuk 1 lapisan BRC A6 dan kerja-kerja acuan konkrit. *(Table-top concrete)*	M^2	360		
5.3	Membekal dan memasang 300mm x 300mm x 8mm tebal kemasan jubin dari jenis berkekaca seramik penghalang gelincir serta 20mm tebal lapisan skrid dan kerja-kerja berkaitan mengikut spesifikasi yang telah ditetapkan.	M^2	2,000		
5.4	Membekal dan memasang 3,150mm x 1,150mm x 0.5mm tebal kepingan *stainless steel* sebagai kemasan meja konkrit termasuk kerja-kerja berkaitan dan dipasang mengikut spesifikasi pembekal dan arahan Pegawai Penguasa.	No	40		
5.5	Kerja-kerja membekal dan memasang 'tiang penggantung' dari jenis 'G.I pipe' bersaiz 63mm dia. termasuk memotong/menggerudi (drilling) serta kerja-kerja berkaitan seperti di dalam pelan yang dilampirkan.	M	100		
	Jumlah Dikumpulkan.				

Dokumen Meja Terkawal

Butiran	Perihal Kerja	Unit	Kuantiti	Kadar Harga	Amaun (RM)
6.0	**KERJA-KERJA MEMBINA LONGKANG (ruang dalaman)**				
6.1	Kerja-kerja membekal dan memasang longkang separuh bulat jenis tembikar bergilap (HRGW) termasuk kerja-kerja pengarasan.				
	a. 100mm dia.	M	200		
	b. 150mm dia.	M	450		
6.2	Kerja-kerja membina 113mm tebal dinding batu-bata pasir termasuk kerja melepa permukaan.				
	a. 2/600m x 0.15m	M^2	180		
6.3	Kerja-kerja membekal dan memasang penutup longkang dari jenis 'Precast Concrete Slab Compressed' termasuk kerja-kerja berkaitan.				
	a. 150mm x 350mm x 50mm	No	150		
	a. 250mm x 600mm x 50mm	No	200		
6.4	Membekal dan memasang penutup longkang dari jenis 'FRP Moulded Gratings' termasuk kerja-kerja penyediaan tapak dan dipasang mengikut spesifikasi pembekal dan arahan Pegawai Penguasa.				
	a. 450mm x 450mm	No	8		
	b. 600mm x 600mm	No	6		
6.5	Kerja-kerja membina dan memasang 1.5mm tebal perangkap sampah dari jenis 'stainless steel plate' berukuran 600mm x 600mm x 750mm seperti di dalam pelan yang dilampirkan.	No	8		
7.0	**KERJA-KERJA SEKITAR BANGUNAN**				
7.1	Kerja-kerja membekal dan memasang saluran tembikar separuh bulatan setebal 75mm (HRGW) termasuk kemasan konkrit dan kerja-kerja memecah longkang HRGW sediada.				
	a. 300mm dia.	M	210		
7.2	Kerja-kerja membina 100mm tebal 'concrete slab' menggunakan konkrit siap bancuh 'Ready Mix' G30 termasuk 1 lapisan BRC A6 dan kerja-kerja acuan konkrit. *(Apron)*				
	a. 60m x 2.4m	M^2	144		
	Jumlah Dikumpulkan.				

Dokumen Meja Terkawal

Butiran	Perihal Kerja	Unit	Kuantiti	Kadar Harga	Amaun (RM)
8.0	**KERJA-KERJA MENGECAT**				
8.1	Membekal segala peralatan, pekerja, jentera dan lain-lain bagi kerja-kerja mengecat struktur keluli bangunan pasar purata ketinggian 9m dari aras lantai seperti berikut :-				
	a. Perancah Keluli *(Scaffolding)*	J.P	-	-	
8.2	Kikis cat lama pada permukaan keluli/logam, bersihkan karat dengan berus dawai dan basuh mana-mana permukaan dengan sabun dan air. (Permukaan logam)	M²	3,500		
8.3	Membekal bahan-bahan, pekerja-pekerja dan peralatan yang diperlukan untuk kerja-kerja menyapu lapisan cat pada permukaan berlepa dan logam dari jenis seperti di bawah atau jenis yang setara dengan jaminan pembekal minimum 5 tahun.				
	a. Struktur Keluli (Base Coat - Anti-Karat - 1 Lapisan)	M²	3,500		
	b. Struktur Keluli (Prime Coat - 2 Lapisan)	M²	3,500		
	c. Dinding Luar (Base Coat - 1 Lapisan)	M²	500		
	d. Dinding Luar (Wall Sealer - 2 Lapisan)	M²	500		
9.0	**KERJA-KERJA NYAHSAMBUNG UTILITI**				
9.1	Melantik kontraktor elektrik berdaftar untuk kerja-kerja nyahsambung bekalan elektrik dari punca kuasa utama termasuk membuka dan mencabut alatan dan pendawaian elektrik dan lain-lain kerja berkaitan seperti dalam pelan, spesifikasi piawai dan arahan Pegawai Penguasa.				
	a. 126 petak peniaga	No	126		
9.2	Melantik kontraktor perpaipan berdaftar untuk kerja-kerja nyahsambung bekalan air dari paip bekalan air utama termasuk membuka dan mencabut sistem perpaipan sediada dan lain-lain kerja berkaitan seperti dalam pelan, spesifikasi piawai dan arahan Pegawai Penguasa.				
	a. 126 petak peniaga	No	126		
	Jumlah Dikumpulkan.				

Dokumen Meja Terkawal

Butiran	Perihal Kerja	Unit	Kuantiti	Kadar Harga	Amaun (RM)
10.0	**KERJA-KERJA PEMASANGAN PAPANTANDA**				
10.1	Membekal dan memasang papan tanda berkaitan menggunakan plate jenis ACP 4mm tebal (Aluminium Composite Panel With Engineering Grade Reflection Stickers) dipasang pada tiang 100mm diameter dan dikonkrit 450mm x 450mm x 600mm termasuk kerja mengecat seperti di dalam pelan yang dilampirkan.	No	10		
	a. Papan Tanda 'PASAR AWAM BANTING' berserta imej produk barangan yang dijual di pasar awam. (3,000mm x 1,800mm)	No	1		
10.2	Membekal dan memasang papan tanda berkaitan menggunakan plate jenis akrilik 5mm tebal termasuk imej / ikon berkaitan dan dipasang pada meja konkrit seperti di dalam pelan yang dilampirkan.				
	a. 200mm x 450mm	No	100		
11.0	**LAIN-LAIN KERJA**				
11.1	Kerja-kerja membuka, membekal dan memasang bumbung dek jenis lutsinar termasuk kelengkapan berkaitan serta kerja-kerja memotong bumbung dek logam sediada.	M^2	184		
11.2	Kerja-kerja membekal dan memasang 'box-up lattering' dari jenis stainless steel termasuk kerja-kerja pemasangan pada dinding dek logam purata ketinggian 20'.				
	a. PASAR AWAM BANTING (16 huruf) - 600mm tinggi	J.P	-	-	
	b. Logo MDKL - 600mm tinggi	J.P	-	-	
	Jumlah Dikumpulkan.				

Dokumen Meja Terkawal

Butiran	Perihal Kerja	Unit	Kuantiti	Kadar Harga	Amaun (RM)
12.0	**KERJA-KERJA PEMASANGAN PERPAIPAN**				
	Melantik kontraktor perpaipan berdaftar untuk kerja-kerja membekal dan memasang saluran perpaipan mengikut keperluan peralatan kebersihan dari saluran pembekal SYABAS seperti di dalam pelan, spesifikasi piawai dan arahan Pegawai Penguasa.				
	Paip Bekalan Air				
12.1	Kerja-kerja membekal dan memasang paip bekalan air jenis ABS termasuk kerja-kerja *pipe fitting* serta semua kelengkapan perpaipan, penyambungan soket, siku, liku dan dipasang mengikut pelan dan spesifikasi pembekal serta arahan Pegawai Penguasa.				
	a. 50mm dia. paip ABS Kelas PN12	M	120		
	b. 32mm dia. paip ABS Kelas PN12	M	500		
	c. 25mm dia. paip ABS Kelas PN12	M	250		
	d. 25mm dia. 'stop cock'	No	100		
	e. 50mm dia. brass gate valve	No	2		
	f. Meter air (plastik)	No	100		
12.2	Kerja-kerja memotong jalan menggunakan *'Diamond Road Cutter'* termasuk kerja mengorek untuk penanaman 50mm dia. paip bekalan air jenis ABS serta menghampar dan memadat pasir, batu campur 'crusher-run' dan premix AC14.	M	120		
12.3	Kerja-kerja memotong lantai konkrit bertetulang sediada termasuk kerja-kerja memecah dan mengorek konkrit pada kedalaman yang ditetapkan bagi mencari punca paip bekalan air sediada termasuk kerja-kerja konkrit semula setelah kerja-kerja penyambungan paip bekalan air yang baru selesai.				
	a. 3m panjang x 3m lebar x 0.3m dalam	J.P	-	-	
	Jumlah Dikumpulkan.				

Dokumen Meja Terkawal

Butiran	Perihal Kerja	Unit	Kuantiti	Kadar Harga	Amaun (RM)
13.0	**KERJA-KERJA ELEKTRIKAL**				
	Melantik kontraktor berdaftar untuk menjalankan kerja-kerja pendawaian elektrik dan memasang kelengkapan seperti spesifikasi yang telah ditetapkan dan arahan P.P				
	Pendawaian permukaan atau terbenam di dalam konduit/ trunking keluli bergavani l/d aksesori yang berkaitan.				
	Membekal dan memasang semua bahan mengikut spesifikasi standard JKR secara pendawaian permukaan atau terbenam dengan menggunakan kabel PVK di dalam konduit/ trunking keluli tergalvani l/d aksessori berkaitan.				
13.1	Mata soket alur kuasa l/d suis soket alur keluar 13A menggunakan kabel 2 x 2.5mm persegi l/d kabel perlindungan.	No	100		
13.2	Soket Alir Keluar 13A.	No	100		
13.3	Kerja-kerja membekal, memasang kabel submain di dalam konduit keluli bergalvani atau talam penatang kabel keluli bergalvani mengikut standard jkr termasuk harga tenaga kerja dan bahan.				
	a. Kabel 2 x 4mm persegi l/d pengalir perlindungan.	M	300		
13.4	Membekal dan memasang LED 200W High Bay Lights, Lumen 12,500-25,000, Colour temperature 3,000K-6,500K, 220-240V, IP44-65, Materials Aluminium & Polycarbonate, life time (hours) 50,000 dan jaminan 2 tahun.	No	48		
13.5	Kerja-kerja membekal dan memasang 1kW Kipas Gergasi / Giant Fan 6 bilah model Grande Series berdiameter 24' termasuk kerja-kerja pendawaian elektrik, penyediaan perancah (scaffolding) dan pengujian serta dipasang mengikut spesifikasi pembekal dan arahan Pegawai Penguasa.	No	3		
13.6	Pengujian dan pentauliahan ke atas pemasangan yang dibuat dan menghantar laporan pengujian kepada Pegawai Penyelia beserta gambar dalam bentuk softcopy / thumbdrive.	J.P.	-	-	
14.0	**KONTIGENSI**				
14.1	Kerja-kerja luar jangka sekiranya perlu dengan arahan Pegawai Penguasa dan akan ditolak sekiranya tidak digunakan.	J.P.	-	-	
	Jumlah Dikumpulkan.				

Dokumen Meja Terkawal

MDKL/JK/T : 05/19

BIL	BUTIRAN	MUKA SURAT	HARGA (RM)
1	KEHENDAK PERMULAAN DAN SYARAT AM	M.S 2/10	
2 & 3	KERJA PEMBERSIHAN TAPAK & KERJA PENYEDIAAN RUANG NIAGA SEMENTARA	M.S 3/10	
4 & 5	KERJA-KERJA MEMBINA LANTAI KONKRIT & KERJA-KERJA MEMBINA RUANG PETAK PENIAGA	M.S 4/10	
6 & 7	KERJA-KERJA MEMBINA LONGKANG (ruang dalaman) & KERJA-KERJA SEKITAR BANGUNAN	M.S 5/10	
8 & 9	KERJA-KERJA MENGECAT & KERJA-KERJA NYAHSAMBUNG UTILITI	M.S 6/10	
10 & 11	KERJA-KERJA PEMASANGAN PAPANTANDA & LAIN-LAIN KERJA	M.S 7/10	
12	KERJA-KERJA PEMASANGAN PERPAIPAN	M.S 8/10	
13 & 14	KERJA-KERJA ELEKTRIKAL & KONTIGENSI	M.S 9/10	
JUMLAH DIBAWA KE BORANG TENDER			

RINGGIT MALAYSIA : ....
.....
.....

.....
Tandatangan Syarikat/Pembekal

Nama Penuh :.....

No. K.P : .....
Alamat :.....
.....
.....
.....
Pekerjaan :.....
Tarikh :.....

.....
Tandatangan Saksi

Nama Penuh :.....

No. K.P : .....
Alamat :.....
.....
.....
.....
Pekerjaan :.....
Tarikh :.....

.....
Menterai/Cap Syarikat

Dokumen Meja Terkawal

LAMPIRAN

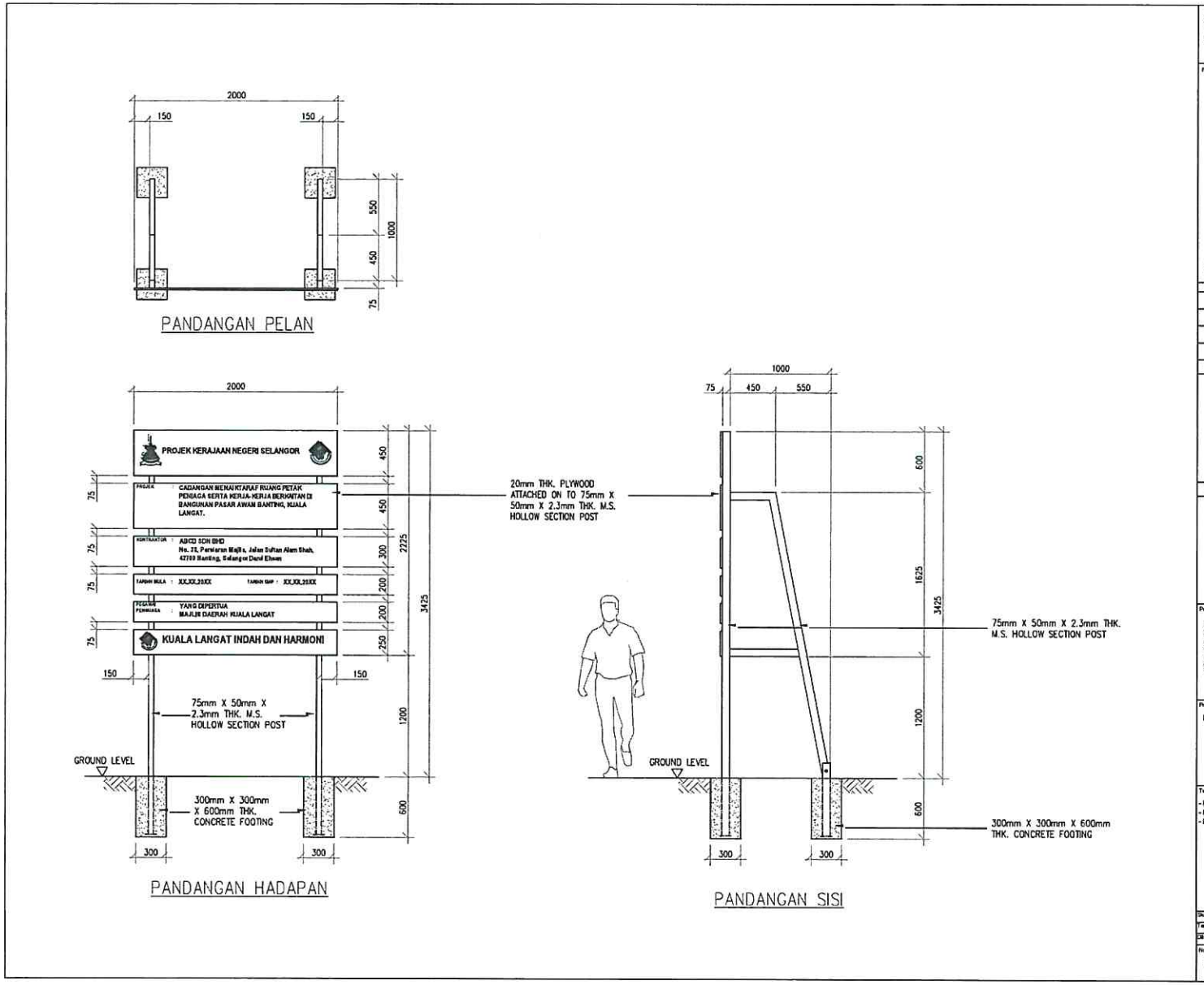

PELAN INI MENGANDUNGI HAKCIPTA, KONTRAKTOR HENDAKLAH MENGIKUTI DIMENSI YANG ADA DI DALAM RAJAH. SEGALA DIMENSI HENDAKLAH DIPERIKSA DI TEMPAT ITU JUGA. SEBARANG SELISIHAN YANG TERDAPAT HENDAKLAH DILAPORKAN DENGAN SEGERA KEPADA PEGAWAI PENGUASA.

NOTA :

SEMUA DIMENSI DALAM UNIT MILIMETER (mm) KECUALI DINYATAKAN

Pindaan	Cadian	Tarikh

Dipersetujui Oleh : | Tarikh

PENGARAH
JABATAN KEJURUTERAAN

Dipersetujui Oleh : | Tarikh

YANG DIPERTUA
MAJLIS DAERAH KUALA LANGAT

Pemilik :

MAJLIS DAERAH KUALA LANGAT
Persiaran Majlis, Jalan Sultan Alam Shah
42700 Banting
Selangor Darul Ehsan
Telefon : 603-3187 2625 / 3187 2732
Faks : 603-3187 9504
Portal Rasmi : www.mdkl.gov.my

Projek :

PAPAN TANDA PROJEK

Tajuk Lukisan :

- PANDANGAN PELAN
- PANDANGAN HADAPAN
- PANDANGAN SISI

Skala		Diserahkan 1	AZI
Tarikh	JULAI 2019	Diserahkan 2	KHAIRUL
Dilukis	FIZA	Pindaan	00

No. Lukisan :

MDKL/JK/P.T.P/TYPE A/01

Dokumen Meja Terkawal

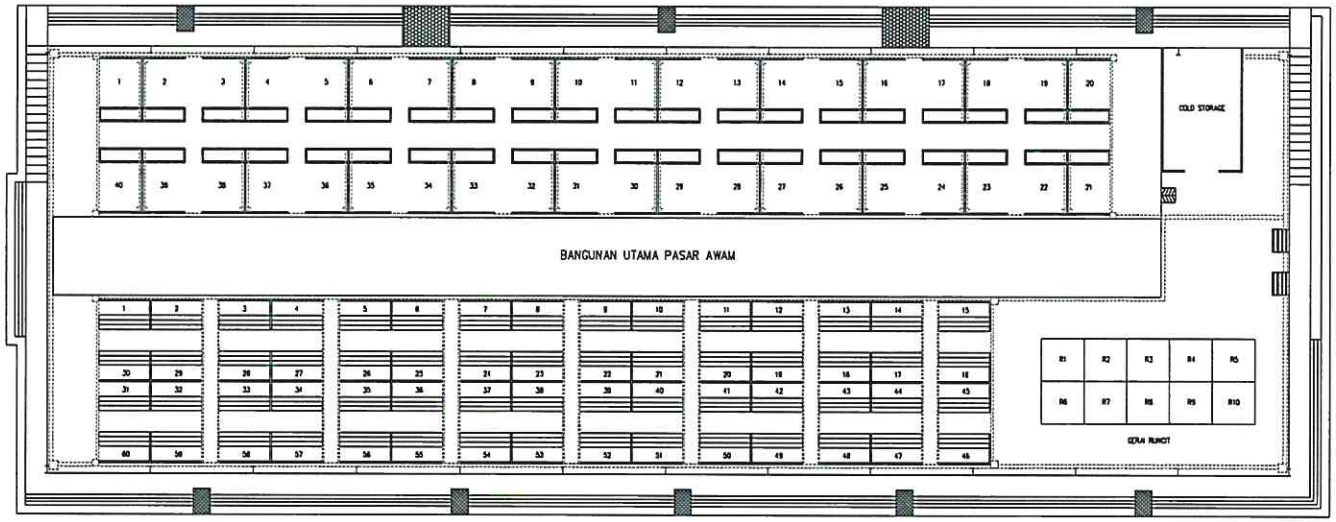

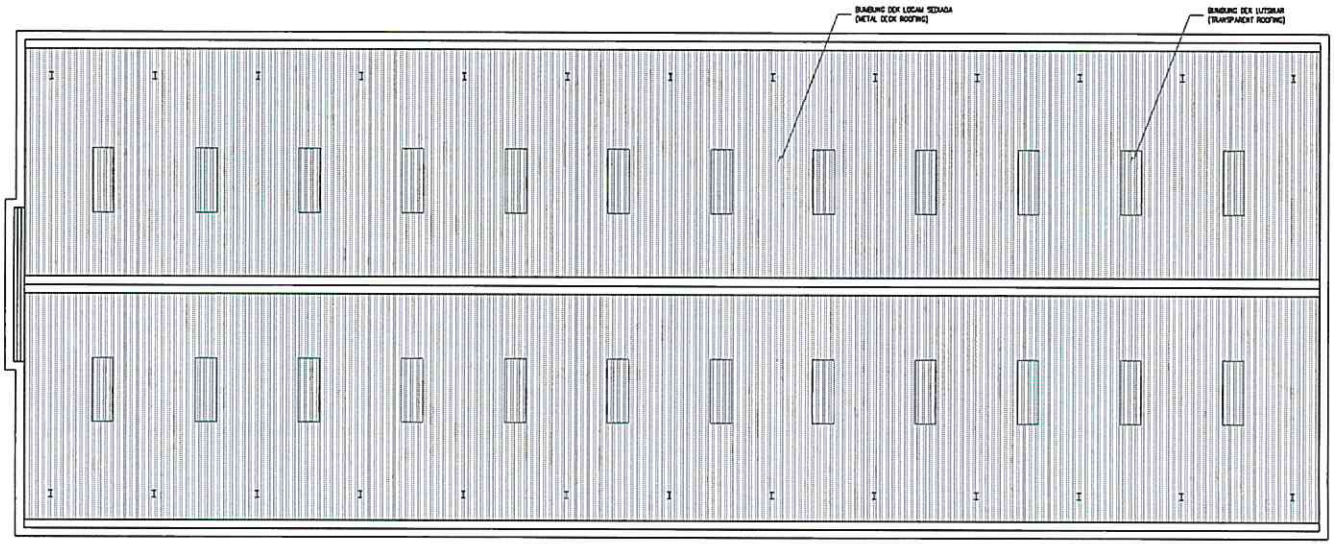

PELAN INI MENGANDUNGI HAKCIPTA. KONTRAKTOR HENDAKLAH MENGIKUTI DIMENSI YANG ADA DI DALAM RAJAH. SEGALA DIMENSI HENDAKLAH DIPERIKSA DI TEMPAT ITU JUGA. SEBARANG SELISIHAN YANG TERDAPAT HENDAKLAH DILAPORKAN DENGAN SEGERA KEPADA PEGAWAI PENGUASA.

NOTA :

SEMUA DIMENSI DALAM UNIT MILIMETER (mm) KECUALI DINYATAKAN

Pindaan	Catitan	Tarikh

Dipersetujui Oleh :	Tarikh	

PENGARAH
JABATAN KEJURUTERAAN

Dipersetujui Oleh :	Tarikh	

YANG DIPERTUA
MAJLIS DAERAH KUALA LANGAT

Pemilik :

MAJLIS DAERAH KUALA LANGAT
Persiaran Majlis, Jalan Sultan Alam Shah
42700 Banting
Selangor Darul Ehsan
Telefon : 603-3187 2825 / 3187 2732
Faks : 603-3187 9004
Portal Rasmi : www.mdkl.gov.my

Projek :

CADANGAN MENAIKTARAF RUANG PETAK PENIAGA SERTA KERJA-KERJA BERKAITAN DI BANGUNAN PASAR AWAM BANTING, KUALA LANGAT.

Tajuk Lukisan :

- PANDANGAN PELAN
- PANDANGAN PELAN (BUMBUNG)

Skala		Disemak 1	AIZI
Tarikh	JULAI 2019	Disemak 2	KHAIRUL
Dilukis	FIZA	Pindaan	00

No. Lukisan :

MDKL/JK/PASARBANTING/01-00

Dokumen Meja Terkawal

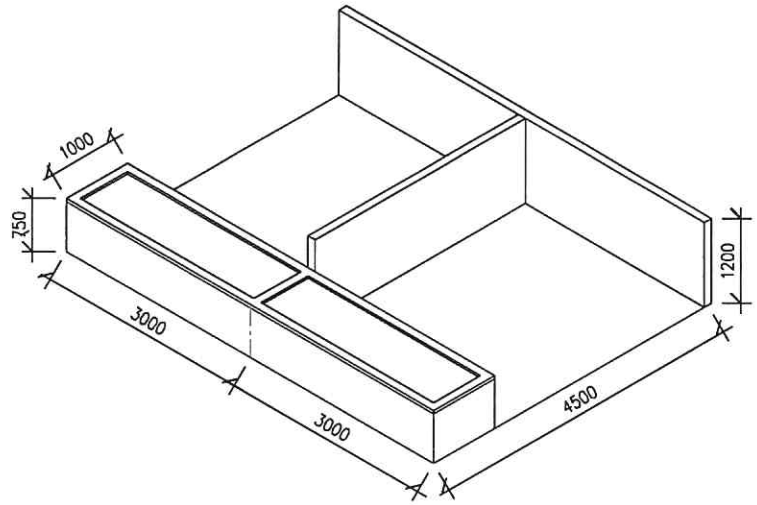

PETAK PENIAGA (JENIS A)

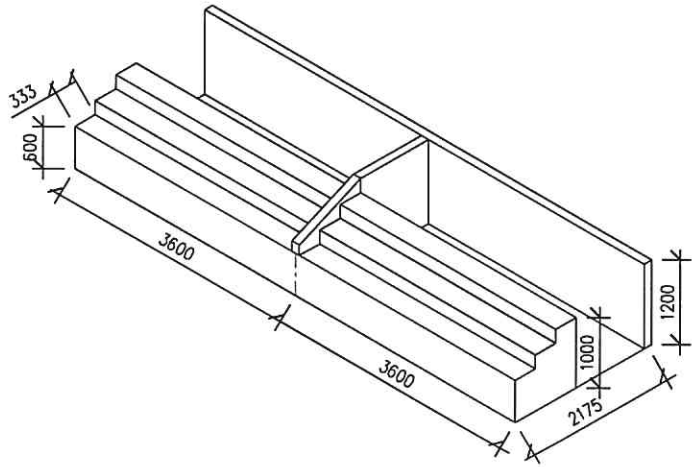

PETAK PENIAGA (JENIS B)

PELAN INI MENGANDUNGI HAKCIPTA. KONTRAKTOR HENDAKLAH MENGIKUTI DIMENSI YANG ADA DI DALAM RAJAH SEGALA DIMENSI HENDAKLAH DIPERIKSA DI TEMPAT ITU JUGA. SEBARANG SELISIHAN YANG TERDAPAT HENDAKLAH DILAPORKAN DENGAN SEGERA KEPADA PEGAWAI PENGUASA

NOTA :

SEMUA DIMENSI DALAM UNIT MILIMETER (mm) KECUALI DINYATAKAN

Pindaan	Catatan	Tarikh

Diperselujui Oleh :	Tarikh	

PENGARAH
JABATAN KEJURUTERAAN

Diperselujui Oleh :	Tarikh	

YANG DIPERTUA
MAJLIS DAERAH KUALA LANGAT

Pemilik :

MAJLIS DAERAH KUALA LANGAT
Persiaran Majlis, Jalan Sultan Alam Shah
42700 Banting
Selangor Darul Ehsan
Telefon : 603-3187 2926 / 3187 2732
Faks : 603-3187 9304
Portal Rasmi : www.mdkl.gov.my

Projek :

CADANGAN MENAIKTARAF RUANG PETAK PENIAGA SERTA KERJA-KERJA BERKAITAN DI BANGUNAN PASAR AWAM BANTING, KUALA LANGAT.

Tajuk Lukisan :

- PETAK PENIAGA (JENIS A)
- PETAK PENIAGA (JENIS B)

Skala		Dilukis 1	KM
Tarikh	JULAI 2019	Dilukis 2	KHAIRUL
Dilukis	IZA	Pindaan	KI

No. Lukisan :

MDKL/JK/PASARBANTING/02-00

Dokumen Meja Terkawal